# RAMSEY COUNTY

## DEPARTMENT OF PUBLIC WORKS

CONSTRUCTION PLAN: FOR GRADING, AGGREGATE BASE, BITUMINOUS BASE AND SURFACING, STORM SEWER, CONCRETE CURB & GUTTER, AND UTILITY IMPROVEMENTS.

# ROSELAWN AVENUE (CSAH NO. 26)

BETWEEN: RICE STREET AND JACKSON STREET

FROM: THE SOUTHWEST CORNER OF THE NORTH HALF OF SECTION 18, TOWNSHIP 29N, RANGE 22W.

TO: THE CENTER POINT OF SECTION 18, TOWNSHIP 29N, RANGE 22W.

S.A.P 62-626-04
M.S.A.P. 138-020-13 WEST CITY LIMITS TO JACKSON STREET

| | FEET | | MILES |
|---|---|---|---|
| GROSS LENGTH | 2330.0 | = | 0.4413 |
| BRIDGE LENGTH | 159.1 | = | 0.0303 |
| EXCEPTION | 159.1 | = | 0.0303 |
| NET LENGTH | 2170.9 | = | 0.4110 |

PLAN 10 30 50
PROFILE HORIZ. 10 20 30 40 50 / 20 40
PROFILE VERT. 5 10
CROSS SECTIONS 10 20
LAYOUT MAP 0 2000 4000

## PLANS SYMBOLS

STATE LINE
COUNTY LINE
TOWNSHIP OR RANGE LINE
SECTION LINE
QUARTER LINE
SIXTEENTH LINE
RIGHT OF WAY LINE
PRESENT RIGHT OF WAY LINE
CONTROL OF ACCESS LINE
PROPERTY LINE (Except Land Lines)
VACATED PLATTED PROPERTY
CORPORATE OR CITY LIMITS
TRUNK HIGHWAY CENTER LINE
RETAINING WALL
RAILROAD
RAILROAD RIGHT OF WAY LINE
RIVER OR CREEK (NAME)
DRY RUN
DRAINAGE DITCH (SIZE)
DRAIN TILE
CULVERT
DROP INLET
GUARD RAIL
BARBED WIRE FENCE
WOVEN WIRE FENCE
CHAIN LINK FENCE
RAILROAD SNOW FENCE
STONE WALL OR FENCE
HEDGE
RAILROAD CROSSING SIGN
RAILROAD CROSSING BELL
ELECTRIC WARNING SIGN
CROSSING GATE
MEANDER CORNER
SLOPE EASEMENT (CONST. LIMITS) — SE —

SOIL BORING SB-3
MARSH
TIMBER / WOODS
DECI. TREE
PINE TREE
CATCH BASIN C.B.
FIRE HYDRANT
STUMP
OVERPASS (Highway Over)
UNDERPASS (Highway Under)
BRIDGE
BUILDING (One Story Frame) 1.S.F. 25
F FRAME C CONCRETE
S STONE T TILE
B BRICK ST STUCCO
IRON PIPE OR ROD
MONUMENT (STONE, CONCRETE, OR METAL)
WOODEN HUB
GRAVEL PIT
SAND PIT
BORROW PIT
ROCK QUARRY

## UTILITIES SYMBOLS

POWER POLE LINE
TELEPHONE OR TELEGRAPH POLE LINE
JOINT TELEPHONE AND POWER ON POWER POLES
ON TELEPHONE POLES
ANCHOR
STEEL TOWER
STREET LIGHT
PEDESTAL (TELEPHONE CABLE TERMINAL)
GAS MAIN — G — G —
WATER MAIN — I — I —

CONDUIT
TELEPHONE CABLE IN CONDUIT — T —
ELECTRIC CABLE IN CONDUIT — P —
TELEPHONE MANHOLE T
ELECTRIC MANHOLE P
BURIED TELEPHONE CABLE — T-BUR —
BURIED ELECTRIC CABLE — P-BUR —
AERIAL TELEPHONE CABLE — T-AE —
SEWER, (SANITARY OR STORM)
SEWER MANHOLE

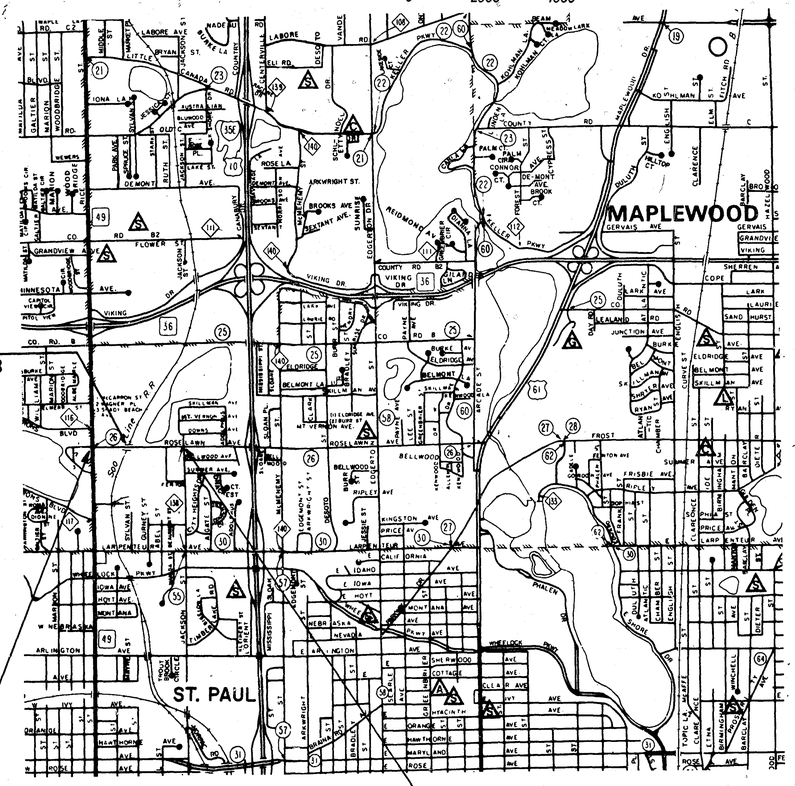


BRIDGE 62559
8+49 TO 10+08

BEGIN PROJECT
STA. 0+50

END PROJECT
STA. 23+80

NOTE SECTION NUMBERS READ FROM THE SOUTH

THE 1988 EDITION OF THE MINNESOTA DEPARTMENT OF TRANSPORTATION "STANDARD SPECIFICATIONS FOR CONSTRUCTION" SHALL GOVERN.

STOPPING SIGHT DISTANCE BASED ON
3.5' HEIGHT OF EYE - 0.5' HEIGHT OF OBJECT

## DESIGN DESIGNATION

S.A.P. NO. 62-626-04

RICE STREET to JACKSON STREET

| | |
|---|---|
| ADT (CURRENT YEAR) 1989 | 3100 |
| ADT (FUTURE YEAR) 2009 | 5000 |
| Σ N 20 YEAR | 325,000 |
| DESIGN LOAD | 10 TON |
| STABILOMETER "R" VALUE | 17 |
| DESIGN SPEED | 40 MPH |
| HC ADT | 350 |
| FUNCTIONAL CLASSIFICATION | COLLECTOR-HIGH DENSITY |
| NO. OF TRAFFIC LANES | 2 |
| NO. OF PARKING LANES | 0 |

## INDEX OF SHEETS


| SHEET NO. | DESCRIPTION |
|---|---|
| 1 | TITLE SHEET |
| 2 | STATEMENT OF ESTIMATED QUANTITIES |
| 3 | TYPICAL SECTIONS |
| 4,5 | MISCELLANEOUS DETAILS |
| 6 | SCHEDULES AND CHARTS |
| 7 | DRAINAGE CHART |
| 8-10 | STREET AND STORM SEWER CONSTRUCTION |
| 11,12 | WATERMAIN AND SERVICE CONSTRUCTION |
| 13 | LANDSCAPE PLAN |
| 14-23 | CROSS SECTIONS |
| 24 | BRIDGE PLAN (FOR INFORMATION ONLY) |


ASBUILT PLAN
CONFORMING TO
CONST. RECORDS
DONE BY: REL
DATE: 2/5/93

DESIGN SQUAD _____ DATE _____
DRAWN BY _____ DATE _____
CHECKED BY _____ DATE _____

I HEREBY CERTIFY THAT THIS PLAN WAS PREPARED BY ME OR UNDER MY DIRECT SUPERVISION AND THAT I AM A DULY REGISTERED PROFESSIONAL ENGINEER UNDER THE LAWS OF THE STATE OF MINNESOTA.

DATE 10/19/89 REG. NO. 16610 ENGR. Thomas W. Peterson

### RAMSEY COUNTY

RECOMMENDED FOR APPROVAL DES (TRAFFIC ENGR.) DATE 5/8/90
RECOMMENDED FOR APPROVAL KMR (ENV. ENGR.) DATE 5/8/90
RECOMMENDED FOR APPROVAL DGS (MAINT. ENGR.) DATE 5-8-90
RECOMMENDED FOR APPROVAL RHP (CONST. ENGR.) DATE 5-8-90
RECOMMENDED FOR APPROVAL DLR (DESIGN ENGR.) DATE 5-10-90
RECOMMENDED FOR APPROVAL _____ (ENGR.) DATE _____
RECOM'D Wayne Tomnak (ADMINISTRATIVE ENGR.) DATE 5-8-90
RECOM'D [illegible] (ASSISTANT CO. ENGINEER) DATE 6/1/90

RECOMMENDED FOR APPROVAL Kenneth E. Witt (COUNTY ENGINEER) DATE 6-1-90
APPROVED R. A. Norgard (CHAIR. OF THE RAMSEY COUNTY BOARD) DATE 10-23-91
APPROVED Ernest D. Hegel (MAPLEWOOD CITY ENGINEER) DATE 1/11/90
APPROVED _____ DATE _____

### MINNESOTA DEPARTMENT OF TRANSPORTATION

RECOMMENDED FOR APPROVAL Julie Skallman DATE 7/25/90
RECOMMENDED FOR APPROVAL [illegible] (DISTRICT STATE AID ENGINEER) DATE 7/11/90
APPROVAL Dennis C. Carlson DATE 7/25/90

| PLAN REVISIONS | | |
|---|---|---|
| DATE | SHEET NO. | BY |
| 5/7/91 | 2,13 | B.J.-T.L. |
| 5/22/92 | 7,9,10,18-23 | BJ-WRL |
| | | |
| | | |

28-117

## ROSELAWN AVENUE
## STATEMENT OF ESTIMATED QUANTITIES

| ITEM NO. | CONTRACT ITEM | UNIT | TOTAL QUANTITIES EST. QUANTITY | TOTAL QUANTITIES FINAL QUANTITY | RAMSEY CO. (1) SAP No. 62-626-04 EST. QUANTITY | RAMSEY CO. (1) SAP No. 62-626-04 FINAL QUANTITY | MAPLEWOOD (2) MSAP No. 138-020-13 EST. QUANTITY | MAPLEWOOD (2) MSAP No. 138-020-13 FINAL QUANTITY | MAPLEWOOD NON-PARTICIPATING EST. QUANTITY | MAPLEWOOD NON-PARTICIPATING FINAL QUANTITY | STORM SEWER (3) EST. QUANTITY | STORM SEWER (3) FINAL QUANTITY |
|---|---|---|---|---|---|---|---|---|---|---|---|---|
| 2021.501 | MOBILIZATION | LS | 1 | | 0.6 | | 0.4 | | | | | |
| 2101.501 | CLEARING | AC | 1 | | | | 1 | | | | | |
| 2101.506 | GRUBBING | AC | 1 | | | | 1 | | | | | |
| 2104.501 | REMOVE SEWER PIPE | LF | 155 | | 155 | | | | | | | |
| 2104.501 | REMOVE CURB & GUTTER | LF | 60 | | 60 | | | | | | | |
| 2104.501 | REMOVE CONCRETE SWALE | LF | 240 | | 240 | | | | | | | |
| 2104.503 | REMOVE CONCRETE SIDEWALK | SF | 184 | | 184 | | | | | | | |
| 2104.503 | REMOVE CONCRETE DRIVEWAY | SF | 1140 | | 1140 | | | | | | | |
| 2104.503 | REMOVE RETAINING WALL | SF | 900 | | 900 | | | | | | | |
| 2104.505 | REMOVE BITUMINOUS PAVEMENT | SY | 7500 | | 7500 | | | | | | | |
| 2104.505 | REMOVE CONCRETE PAVEMENT | SY | 35 | | 35 | | | | | | | |
| 2104.511 | SAWING CONCRETE PAVEMENT | LF | 110 | | 110 | | | | | | | |
| 2104.513 | SAWING BITUMINOUS PAVEMENT | LF | 170 | | 170 | | | | | | | |
| 2104.521 | SALVAGE CHAIN LINK FENCE | LF | 1400 | | 1400 | | | | | | | |
| 2104.521 | SALVAGE GUARD RAIL | LF | 518 | | 518 | | | | | | | |
| 2104.523 | SALVAGE ANCHORAGE ASSEMBLY | EA | 4 | | 4 | | | | | | | |
| 2104.523 | SALVAGE VEHICULAR GATE | EA | 5 | | 5 | | | | | | | |
| 2104.523 | SALVAGE CASTING | EA | 6 | | | | 6 | | | | | |
| 2104.523 | SALVAGE 24" FES, BULKHEAD PIPE | EA | 2 | | 2 | | | | | | | |
| 0104.602 | SALVAGE & REINSTALL MAIL BOX | EA | 10 | | | | 10 | | | | | |
| 0104.602 | SALVAGE HYDRANT | EA | 1 | | | | 1 | | | | | |
| 2105.501 | COMMON EXCAVATION (P) | CY | 6400 | | 4700 | | 1700 | | | | | |
| 2105.522 | SELECT GRANULAR BORROW (LV) | CY | 13000 | | 8125 | | 4875 | | | | | |
| 2105.523 | COMMON BORROW (LV) | CY | 32000 | | 23100 | | 8900 | | | | | |
| 2105.525 | TOPSOIL BORROW (LV) | CY | 2300 | | 2300 | | | | | | | |
| 2130.501 | WATER | MGAL | 50 | | 35 | | 15 | | | | | |
| 2211.503 | AGGR. BASE PLACED, CLASS 6 | CY | 1900 | | 1160 | | 740 | | | | | |
| 2211.503 | AGGR. BASE PLACED, CL. 6 (DRWYS) | CY | 150 | | 150 | | | | | | | |
| 2331.504 | BIT. MATERIAL FOR MIXTURE | TON | 164 | | 117 | | 47 | | | | | |
| 2331.510 | BINDER COURSE MIXTURE | TON | 1185 | | 800 | | 385 | | | | | |
| 2331.510 | BINDER COURSE MIXTURE (DRWYS) | TON | 100 | | 100 | | | | | | | |
| 2331.514 | BASE COURSE MIXTURE | TON | 1910 | | 1400 | | 510 | | | | | |
| 2341.504 | BIT. MATERIAL FOR MIXTURE | TON | 51 | | 37 | | 14 | | | | | |
| 2341.508 | WEARING COURSE MIXTURE | TON | 820 | | 600 | | 220 | | | | | |
| 2341.510 | WEARING COURSE MIXUTRE (DRWYS) | TON | 100 | | 100 | | | | | | | |
| 2357.502 | BIT. MAT'L FOR TACK COAT | GAL | 1000 | | 660 | | 340 | | | | | |
| 0411.603 | KEYSTONE RETAINING WALL | SF | 3000 | | | | 3000 | | | | | |
| 2503.511 | 15" CM PIPE SEWER | LF | 139 | | | | | | | | 139 | |
| 2503.541 | 15" RC PIPE SEWER,CL V-DES 3006 | LF | 1737 | | | | | | | | 1737 | |
| 2503.541 | 18" RC PIPE SEWER,CL V-DES 3006 | LF | 20 | | | | | | | | 20 | |
| 2501.515 | 15" CM PIPE APRON | EA | 2 | | | | | | | | 2 | |
| 2501.515 | 36" RC PIPE APRON | EA | 2 | | 2 | | | | | | | |
| 2501.561 | 36" RC PIPE CULVERT;CL V-DES 3006 | LF | 200 | | 200 | | | | | | | |
| 2502.541 | 4" PERF. TP PIPE DRAIN | LF | 4200 | | 4200 | | | | | | | |
| 2503.511 | 8" PVC SEWER, 12' - 14' | LF | 76 | | | | | | **76** | | | |
| 2503.511 | 8" PVC SEWER, 14' - 16' | LF | 200 | | | | | | **200** | | | |
| 2503.511 | 8" DIP SEWER, 16' - 18' | LF | 125 | | **125*** | | | | | | | |
| 2503.511 | 8" DIP SEWER, 18' - 20' | LF | 40 | | **40*** | | | | | | | |
| 2503.511 | 8" DIP SEWER, 20' - 22' | LF | 40 | | **40*** | | | | | | | |
| 2503.511 | 8" DIP SEWER, 22' - 24' | LF | 30 | | **30*** | | | | | | | |
| 2503.511 | 8" DIP SEWER, 24' - 26' | LF | 25 | | **25*** | | | | | | | |
| 2503.511 | 8" DIP SEWER, 26' - 28' | LF | 22 | | **22*** | | | | | | | |
| 2503.511 | 10" DIP SEWER, 20' - 22' | LF | 7 | | **7*** | | | | | | | |
| 2503.511 | 10" DIP SEWER, 22' - 24' | LF | 5 | | **5*** | | | | | | | |
| 2503.511 | 10" DIP SEWER, 24' - 26' | LF | 4 | | **4*** | | | | | | | |
| 2503.511 | 10" DIP SEWER, 26' - 28' | LF | 4 | | **4*** | | | | | | | |
| 2503.511 | 10" DIP SEWER, 28' - 30' | LF | 60 | | **60*** | | | | | | | |
| 2503.511 | 10" DIP SEWER, 30' - 32' | LF | 50 | | **50*** | | | | | | | |
| 2503.511 | 10" DIP SEWER, 32' - 34' | LF | 42 | | **42*** | | | | | | | |

**NOTE: Quantities with a " * " following them have been revised 9/26/90**

NOTE:

(1) CENTER 24', 100% S.A.P. FUNDED

(2) OUTSIDE CENTER 24' AND WITHIN ROADWAY:
75% M.S.A.P. FUNDED (MAPLEWOOD)
25% S.A.P. FUNDED (RAMSEY COUNTY)

(3) STORM SEWER – PROPORTIONAL SPLIT BETWEEN RAMSEY CO. AND MAPLEWOOD

## ROSELAWN AVENUE
## STATEMENT OF ESTIMATED QUANTITIES

| ITEM NO. | CONTRACT ITEM | UNIT | TOTAL QUANTITIES EST. QUANTITY | TOTAL QUANTITIES FINAL QUANTITY | RAMSEY CO. (1) SAP No. 62-626-04 EST. QUANTITY | RAMSEY CO. (1) SAP No. 62-626-04 FINAL QUANTITY | MAPLEWOOD (2) MSAP No. 138-020-13 EST. QUANTITY | MAPLEWOOD (2) MSAP No. 138-020-13 FINAL QUANTITY | MAPLEWOOD NON-PARTICIPATING EST. QUANTITY | MAPLEWOOD NON-PARTICIPATING FINAL QUANTITY | STORM SEWER (3) EST. QUANTITY | STORM SEWER (3) FINAL QUANTITY |
|---|---|---|---|---|---|---|---|---|---|---|---|---|
| 2503.511 | 10" DIP SEWER, 34' - 36' | LF | 21 | | | | | | 21 | | | |
| 2503.511 | 10" DIP SEWER, 36' - 38' | LF | 40 | | | | | | 40 | | | |
| 2503.511 | 6" RISER PIPE | LF | 20 | | | | | | 20 | | | |
| 0503.601 | REPAIR WYE, RISER, SERVICE & MAIN PIPE @ STA. 1+25 | LS | 1 | | | | | | 1 | | | |
| 0503.602 | 8" X 6" WYE | EA | 3 | | | | | | 3 | | | |
| 0503.602 | 6" PLUG | EA | 3 | | | | | | 3 | | | |
| 0503.603 | 6" PVC SEWER SERVICE | LF | 13 | | | | | | 13 | | | |
| 0503.603 | 6" DIP SEWER SERVICE | LF | 36 | | | | | | 36 | | | |
| 0503.603 | REPAIR 8" VCP SAN. SEWER | LF | 38 | | | | | | 38 | | | |
| 0504.602 | CONNECT TO EX. WATER MAIN | EA | 4 | | | | | | 4 | | | |
| 0504.602 | FURNISH AND INSTALL HYDRANT | EA | 3 | | | | | | 3 | | | |
| 0504.602 | CONSTRUCT BLOWOFF MANHOLE | EA | 1 | | | | | | 1 | | | |
| 0504.602 | FURN. & INSTALL 6" G.V. & BOX | EA | 5 | | | | | | 5 | | | |
| 0504.602 | FURN. & INSTALL 8" G.V. & BOX | EA | 3 | | | | | | 3 | | | |
| 0504.602 | FURN. & INS. 12" BF VALVE & BOX | EA | 5 | | | | | | 5 | | | |
| 0504.602 | ADJUST VALVE BOX | EA | 7 | | | | | | 7 | | | |
| 0504.602 | ADJUST VALVE NUT AND BOX | EA | 4 | | | | | | 4 | | | |
| 0504.602 | WATER EASEMENT MARKER | EA | 7 | | | | | | 7 | | | |
| 0504.603 | WATER SERVICE TRENCH EXCAVATION | LF | 5 | | | | | | 5 | | | |
| 0504.603 | 6" DIP WATER MAIN, CL. 53 | LF | 120 | | | | | | 120 | | | |
| 0504.603 | 8" DIP WATER MAIN, CL. 53 | LF | 225 | | | | | | 225 | | | |
| 0504.603 | 12" DIP WATER MAIN, CL. 52 | LF | 1165 | | | | | | 1165 | | | |
| 0504.603 | 12" DIP CL. 52 W/24" CASING-JACK | LF | 55 | | | | | | 55 | | | |
| 0504.605 | 2" POLYSTYRENE INSULATION | SY | 30 | | | | | | 30 | | | |
| 0504.620 | CAST/DUCTILE IRON FITTINGS | LBS | 7200 | | | | | | 7200 | | | |
| 2506.507 | CONSTRUCT CATCH BASIN, DES SP 2 | EA | 2 | | | | | | | | 2 | |
| 2506.508 | CONSTRUCT MANHOLE, DES. A OR F | EA | 8 | | **2*** | | | | **2*** | | 4 | |
| 2506.509 | CONST. CB, DES. LP4-4 OR 5 | EA | 11 | | | | | | | | 11 | |
| 2506.509 | CONST. SIDE DRAINS, DES. C | EA | 2 | | | | | | | | 2 | |
| 2506.511 | RECONSTRUCT MANHOLE | LF | 53.9 | | | | | | | | | |
| 2506.521 | INSTALL CASTING | EA | 7 | | 24.5<br>5 | | | | 29.4<br>2 | | | |
| 2506.522 | ADJ. FRAME & RING CASTING | EA | 2 | | 2 | | | | | | | |
| 0506.602 | CON. 15" CMP TO 18" RCP W/CON. JNT. | EA | 1 | | | | | | | | 1 | |
| 0506.602 | CONNECT INTO EX. MANHOLE | EA | 1 | | | | | | | | 1 | |
| 0506.602 | OFF ROAD STRUCTURE MARKER | EA | 8 | | | | | | 5 | | 3 | |
| 0506.603 | MANHOLE DEPTH GREATER THAN 8' | LF | 83 | | **60*** | | | | **18*** | | 5 | |
| 2511.501 | RANDOM RIPRAP, CL. III | CY | 30 | | | | | | | | 30 | |
| 2511.511 | GRANULAR FILTER | CY | 15 | | | | | | | | 15 | |
| 2511.515 | GEOTEXTILE FILTER, TYPE IV | SY | 60 | | | | | | | | 60 | |
| 2521.501 | 4" CONCRETE WALK | SF | 80 | | | | 80 | | | | | |
| 2531.501 | CONC. CURB & GUTTER, DES. B624 | LF | 4500 | | 4500 | | | | | | | |
| 2531.501 | CONC. CURB & GUTTER, DES. B612 | LF | 280 | | | | 280 | | | | | |
| 2531.507 | 6" CONC. DRIVEWAY PAVEMENT | SY | 90 | | 90 | | | | | | | |
| 2535.501 | BITUMINOUS CURB | LF | 200 | | | | 200 | | | | | |
| 2554.511 | INSTALL T BARRIER, DES. B8307 | LF | 500 | | 500 | | | | | | | |
| 2554.523 | TWISTED END TREATMENT | EA | 4 | | 4 | | | | | | | |
| 2557.501 | WIRE FENCE, DES. 72-9322 | LF | 30 | | 30 | | | | | | | |
| 0557.602 | INSTALL VEHICULAR GATE | EA | 5 | | 5 | | | | | | | |
| 0557.603 | INSTALL CHAIN LINK FENCE | LF | 1350 | | 1350 | | | | | | | |
| 0563.601 | TRAFFIC CONTROL (DETOUR SIGNING) | LS | 1 | | 0.5 | | 0.5 | | | | | |
| **2571.501** | PINE, AUSTRIAN 5' B&B | TREE | 7 | | | | 7 | | | | | |
| **2571.501** | **SPRUCE, BLACK HILLS 5' HI B&B** | TREE | **9** | | | | **9** | | | | | |
| 2571.502 | POPLAR, ROBUSTA 8' HI BR | TREE | 20 | | | | 20 | | | | | |
| 2571.502 | LINDEN, AMERICAN 1.75" CAL B&B | TREE | 3 | | | | 3 | | | | | |
| 2573.502 | SILT FENCE, HEAVY DUTY | LF | 1735 | | | | 1735 | | | | | |
| 2575.505 | SODDING, TYPE LAWN | SY | 1500 | | 1500 | | | | | | | |
| 0575.609 | SEEDING W/FERTILIZER & MULCH | AC | 3 | | 3 | | | | | | | |

| REVISIONS | DATE | BY |
|---|---|---|
| 2571.501 BLACK HILLS SPRUCE | 5/91 | T.L. |

28-117

© BONESTROO, ROSENE, ANDERLIK, AND ASSOCIATES, INC. 1989

I HEREBY CERTIFY THAT THIS PLAN WAS PREPARED BY ME OR UNDER MY DIRECT SUPERVISION AND THAT I AM A DULY REGISTERED PROFESSIONAL ENGINEER/ARCHITECT UNDER THE LAWS OF THE STATE OF MINNESOTA.
DATE 5/30/90 REG. NO. 16610 Thomas W. Peterson

| | |
|---|---|
| SURVEY | HBR |
| DRAWN | DFD |
| DESIGN | TWP |
| APPROV'D | MLS |

REVISIONS

BONESTROO, ROSENE, ANDERLIK & ASSOC., INC.
Engineers & Architects
St. Paul, Minnesota

RAMSEY COUNTY, MINNESOTA
DATE: OCT. 19, 1989 COMM. 21802

ROSELAWN AVENUE
STATEMENT OF ESTIMATED QUANTITIES
RICE ST. to JACKSON ST.
S.A.P. No. 62-626-04

SHEET 2/24

21802-03.DWG

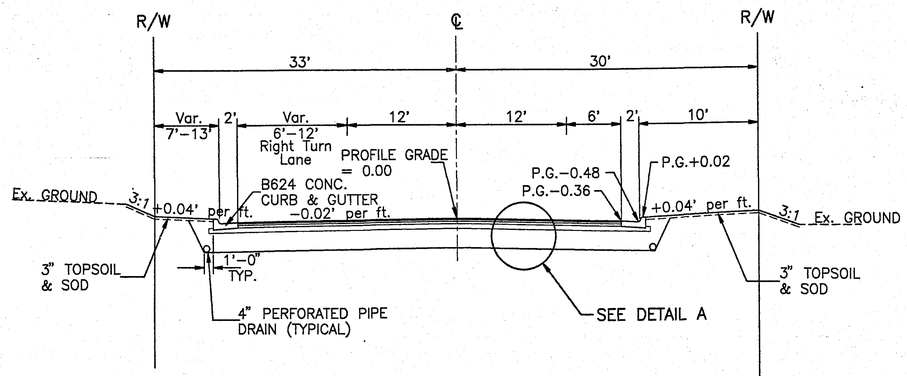


Sta. 0+40 to Sta. 3+00

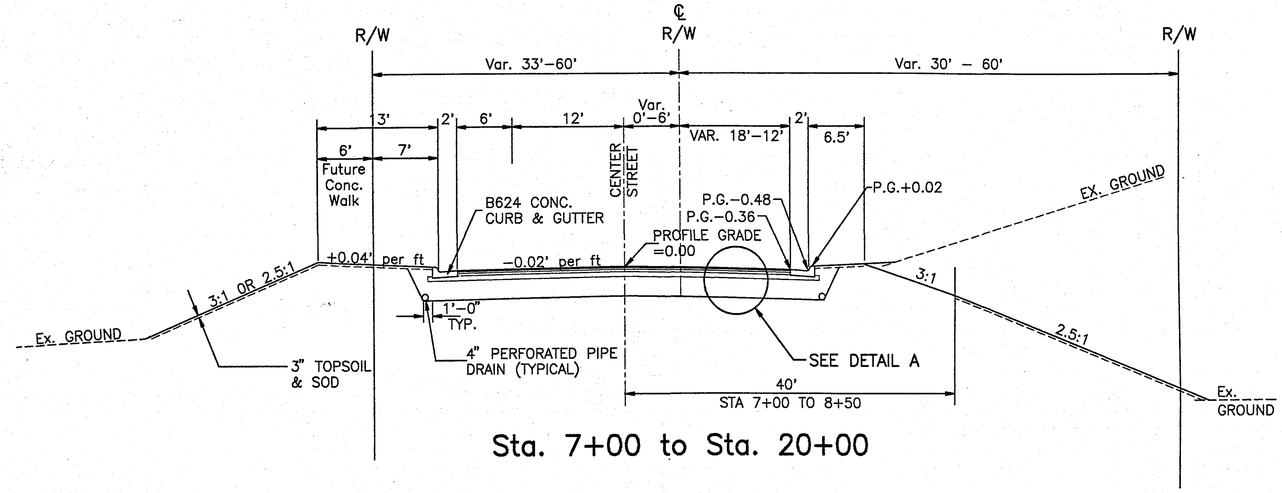


Sta. 7+00 to Sta. 20+00

NOTE: 2' OBSTACLE FREE CLEAR ZONE IS REQUIRED FROM FACE OF CURB.

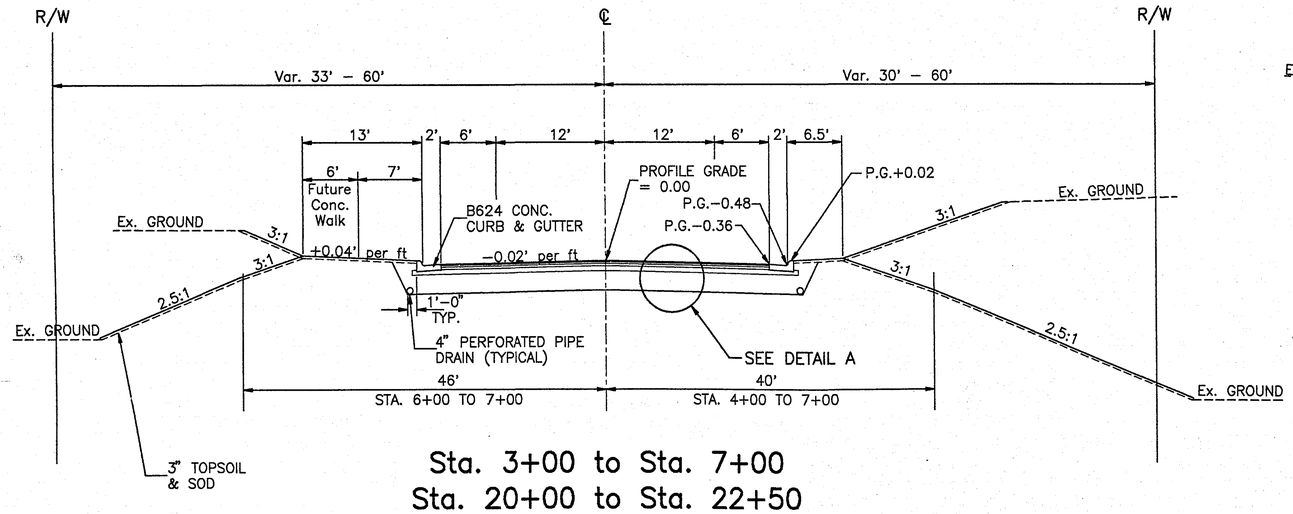


Sta. 3+00 to Sta. 7+00
Sta. 20+00 to Sta. 22+50

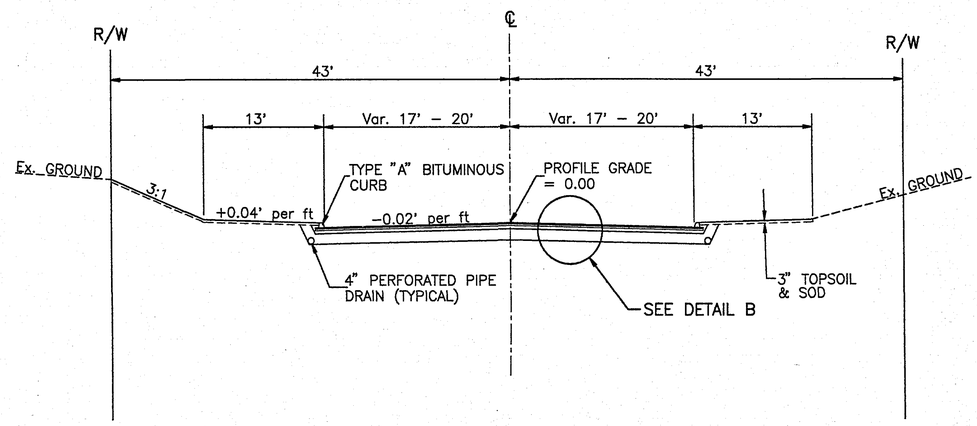


TAPERED SECTION CONSTRUCTION
Sta. 22+50 to Sta. 23+80

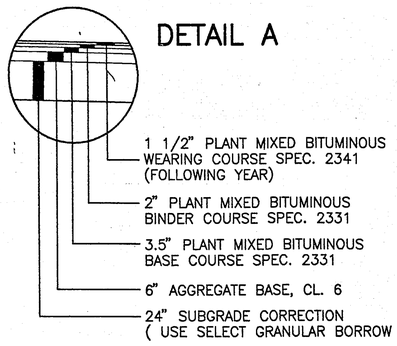


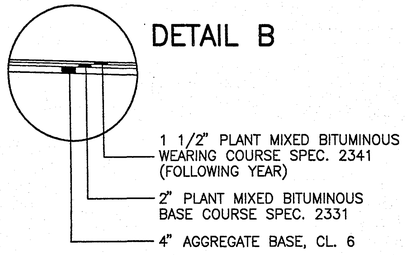


# TYPICAL SECTIONS

Not to Scale

28-117

© BONESTROO, ROSENE, ANDERLIK, AND ASSOCIATES, INC. 1989

I HEREBY CERTIFY THAT THIS PLAN WAS PREPARED BY ME OR UNDER MY DIRECT SUPERVISION AND THAT I AM A DULY REGISTERED PROFESSIONAL ENGINEER/ARCHITECT UNDER THE LAWS OF THE STATE OF MINNESOTA.
DATE 10/19/89 REG. NO. 16610 Thomas W Peterson

| | |
|---|---|
| SURVEY | HBR |
| DRAWN | DFD |
| DESIGN | TWP |
| APPROV. | MLS |

REVISIONS

BONESTROO, ROSENE, ANDERLIK & ASSOC., INC.
Engineers & Architects
St. Paul, Minnesota

RAMSEY COUNTY, MINNESOTA
DATE: OCT. 19, 1989 COMM. 21802

ROSELAWN AVENUE
TYPICAL SECTIONS
RICE ST. to JACKSON ST.
S.A.P. No. 62–626–04

SHEET 3/24

21802–02

## RIPRAP & GRANULAR FILTER DETAIL

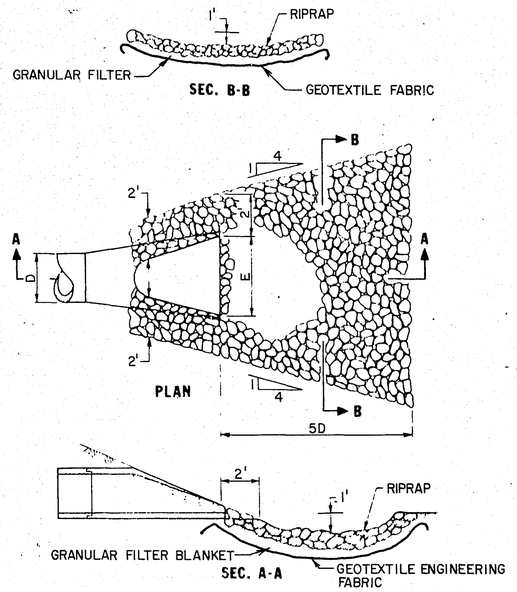


NOTE: INCLUDE PRICE OF GEOTEXTILE FABRIC IN OTHER ITEMS. NO SEAMS WILL BE PERMITTED.
GEOTEXTILE FILTER MATERIAL SHALL BE FURNISHED & INSTALLED PER SPEC. 2511.515 & 3733 FOR TYPE III GEOTEXTILES.
TABLE OF MATERIAL QUANTITIES FOR APRONS AT R.C.P. OUTLETS ( ?

## CURB OPENING CATCH BASIN - DESIGN LP INSTALLATION DETAIL

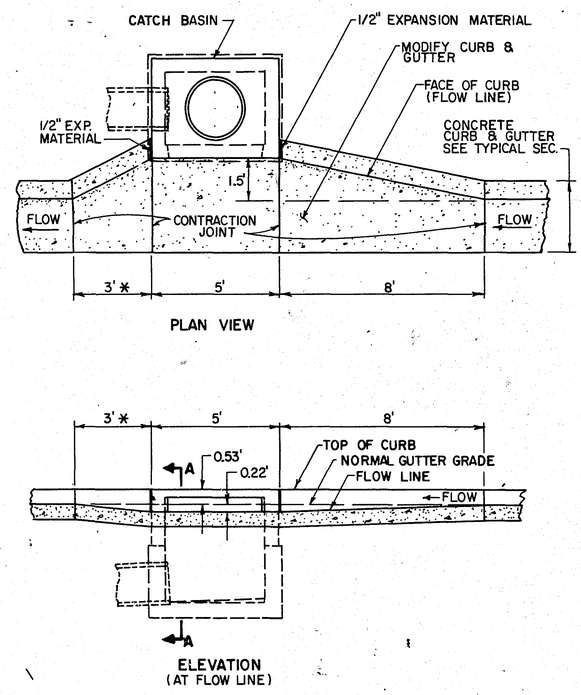


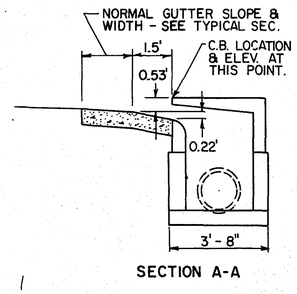


NOTES:

1. * DIMENSION SHALL BE 8' WHEN STRUCTURE INSTALLED AT LOW POINT IN GRADE
2. CATCH BASIN - DESIGN LP - SEE MN/DOT STD. PL. NO. 4021C.
3. TOP OF CATCH BASIN SHALL BE INSTALLED AT SAME SLOPE AS BLVD. GRADES AND TOP OF CURB GRADE EACH SIDE OF STRUCTURE.
4. ELEVATION OF STRUCTURE IS COMPUTED AT LOCATION SHOWN IN SEC. A-A AT ℄ OF C.B. OPENING.

3/4" BARS FOR TRANSVERSE AND EDGE REINFORCEMENT

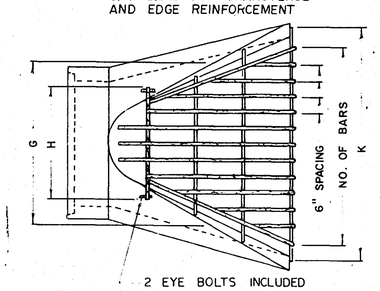


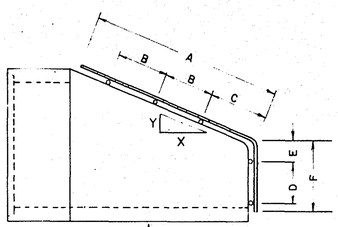


1/2" BARS FOR LONGITUDINAL INTERIOR BARS, WELD EACH INTERSECTION.

CONTRACTOR SHALL FURNISH SUITABLE LOCKING DEVICE APPROVED BY ENGINEER.

| SIZE | NO. OF BARS | SLOPE | A | B | C | D | E | F | G | H | K |
|---|---|---|---|---|---|---|---|---|---|---|---|
| 12" | 5 | 3 to 1 | 24 | 10 | 10 | 5 | 2 | 8 | 24 | | 30 |
| 15" | 6 | " | 24 | 10 | 10 | 6 | 2 | 10 | 26 | | 34 |
| 18" | 7 | " | 24 | 10 | 10 | 6 | 3 | 12 | 28 | | 40 |
| 21" | 8 | " | 36 | 16 | 16 | 7 | 3 | 12 | 34 | | 50 |
| 24" | 9 | " | 44 | 20 | 20 | 10 | 4 | 16 | 36 | | 52 |
| 27" | 10 | " | 50 | 23 | 23 | 10 | 4 | 16 | 38 | | 58 |
| 30" | 11 | " | 56 | 26 | 26 | 12 | 4 | 18 | 42 | | 64 |
| 36" | 13 | " | 64 | 30 | 30 | 12 | 4 | 18 | 48 | | 76 |
| 42" | 15 | " | 68 | 32 | 32 | 16 | 8 | 26 | 60 | | 88 |
| 48" | 16 | " | 76 | 36 | 36 | 14 | 10 | 28 | 62 | | 92 |
| 54" | 17 | 2.4 to 1 | 76 | 36 | 36 | 16 | 12 | 32 | 68 | | 96 |
| | | | | | | | | | | | |

## TRASH GUARD (GALVANIZED)
(FOR CONCRETE APRON)

## CASTING ASSEMBLY
(FOR DESIGN SPECIAL 2 CATCH BASIN)

NOTES:

1. MATERIALS: CAST GRAY IRON, CLASS 30, MN/DOT SPEC. REFERENCE 3321
2. CURB BOX HEIGHT SHALL BE ADJUSTABLE 6" TO 9"
3. SEE CATCH BASIN-DESIGN SPECIAL 2 DETAIL FOR CASTING INSTALLATION DETAIL.

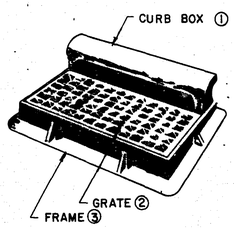


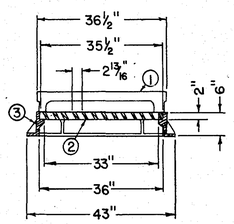


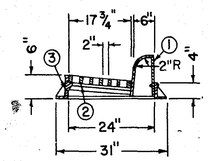


## CATCH BASIN - DESIGN SPECIAL 2

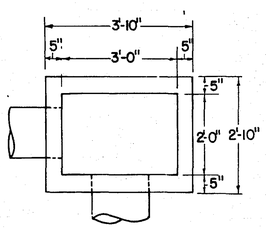


CATCH BASIN PLAN

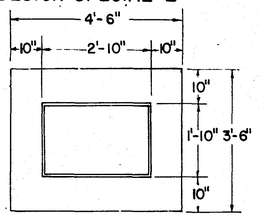


BASE SLAB PLAN

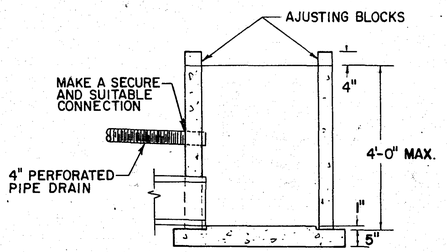


SECTIONAL VIEW
CATCH BASIN & BASE SLAB

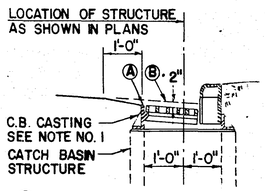


Ⓐ ELEVATION OF STRUCTURE COMPUTED AT THIS LOCATION
Ⓑ NORMAL GUTTER GRADE

INSTALLATION DETAIL

1. TO BE USED WITH NEENAH R-3067-L OR EQUAL.
2. PIPE CUT-OUTS TO BE LOCATED WHERE REQUIRED.
3. ALTERNATE CAST-IN-PLACE BASE SLAB CAN BE USED.
4. INSTALL AS PER MN/DOT STANDARD PLATE NO. 7111E.
5. REINFORCING: SINGLE LINE STEEL WIRE FABRIC.
   WALL = W3.5 X W3.0 HAVING AN AREA OF NOT LESS THAN .21 SQ. IN. PER FOOT OF HEIGHT.
   BASE = W4.0 X W4.0 HAVING AN AREA OF NOT LESS THAN .16 SQ. IN. PER FOOT OF HEIGHT.
6. ALTERNATE CONSTRUCTION - THE CATCH BASIN MAY BE CONSTRUCTED OF BLOCKS OR BRICKS CONFORMING TO THE REQUIREMENTS OF MN/DOT SPEC. 2506 AND AS DIRECTED BY THE ENGINEER.

STORM SEWER DETAILS 28-117

## CONCRETE ENTRANCE DETAIL

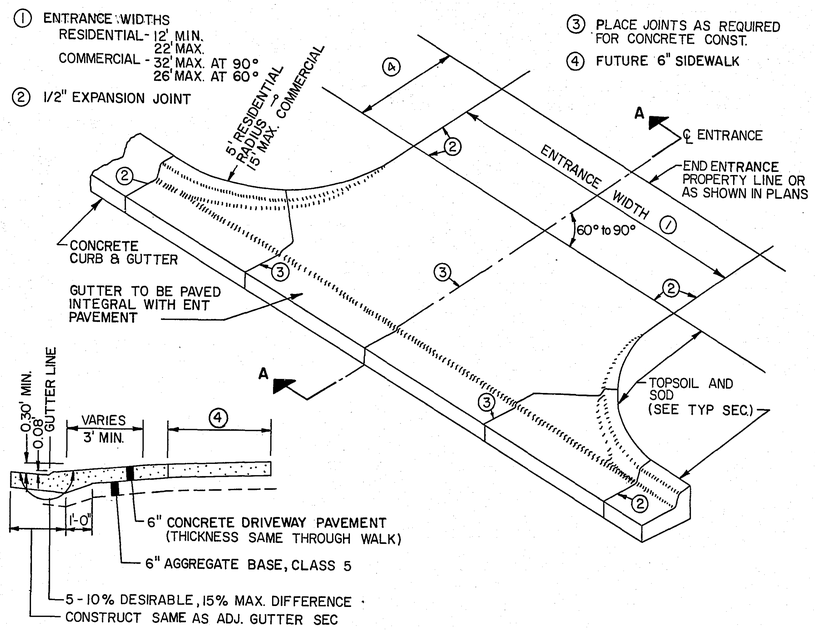


SECTION A-A

## TYPICAL SECTION KEYSTONE RETAINING WALL

SCALE 3/8" = 1'-0"

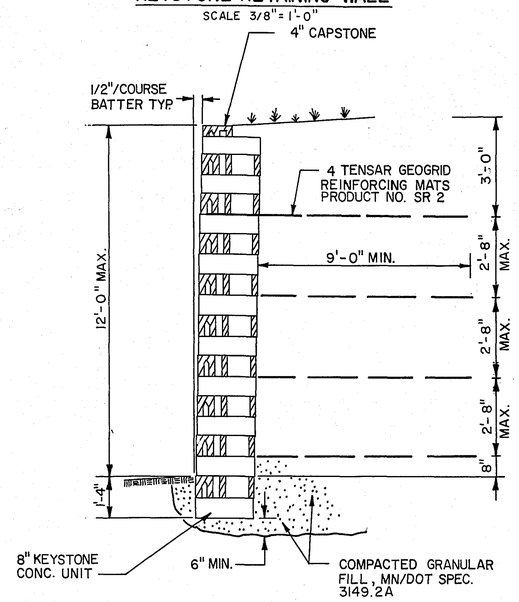


## SILT FENCE INSTALLATION

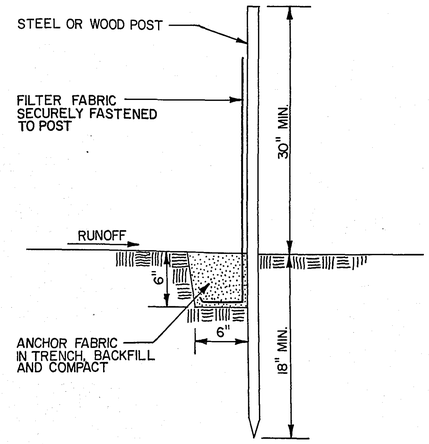


SEE SILT FENCE CHART (SHEET 6) FOR LOCATIONS

## BITUMINOUS ENTRANCE DETAIL

① ENTRANCE WIDTHS
RESIDENTIAL 12' MIN.
22' MAX.
COMMERCIAL 32' MAX. AT 90°
26' MAX. AT 60°

② 1/2" EXPANSION JOINT

③ PLACE JOINTS AS REQUIRED FOR CONC CURB & GUTTER

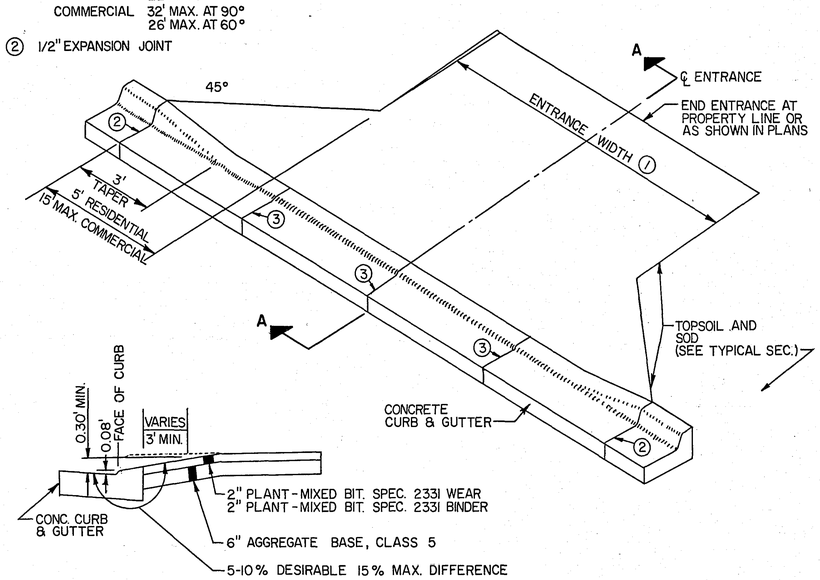


SECTION A-A

## RIPRAP DETAIL AT CMP OUTLET
STATION 9+70

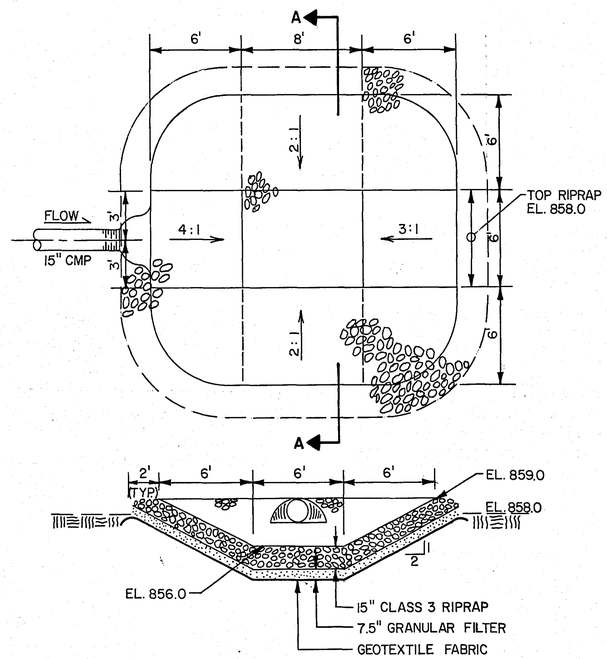


SECTION A-A
SCALE: 1" = 5'

## PERFORATED PIPE PLACEMENT DETAIL

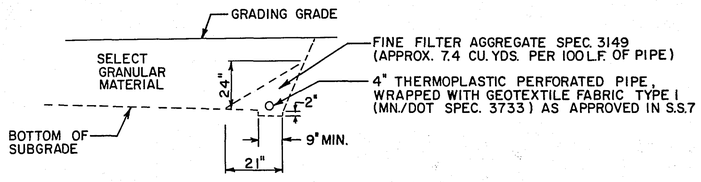


NOTE:
PAYMENT OF PERFORATED PIPE SHALL INCLUDE FINE FILTER AGGREGATE & GEOTEXTILE FABRIC.

28-117

SAP 62-626-04

©BONESTROO, ROSENE, ANDERLIK & ASSOCIATES, INC. 1989

I HEREBY CERTIFY THAT THIS PLAN WAS PREPARED BY ME OR UNDER MY DIRECT SUPERVISION AND THAT I AM A DULY REGISTERED PROFESSIONAL ENGINEER/ARCHITECT UNDER THE LAWS OF THE STATE OF MINNESOTA.
DATE 10/19/89 REG. NO. 16610 Thomas W. Peterson

| SURVEY | |
|---|---|
| DRAWN | AF |
| DESIGN | TWP |
| APPROV'D | MLS |

REVISIONS

BONESTROO, ROSENE, ANDERLIK & ASSOC., INC.
Engineers & Architects
St. Minnesota

RAMSEY COUNTY, MINNESOTA
DATE: OCT. 19, 1989 COMM. 21802

MISCELLANEOUS DETAILS

SHEET 5/24

## SALVAGES AND REMOVALS

| STATION | LOCATION | SALVAGE CHAIN LINK FENCE | SALVAGE MAILBOX | SALVAGE MISC. ITEMS | SALVAGE GUARD RAIL & POSTS | SALVAGE VEHICULAR GATE | REMOVE CMP | REMOVE CONCRETE WALK | REMOVE CONCRETE PAVEMENT | REMOVE CONCRETE SWALE | REMOVE CONCRETE DRIVEWAY | REMOVE BITUMINOUS DRIVEWAY | REMOVE RETAINING WALL | REMARKS |
|---|---|---|---|---|---|---|---|---|---|---|---|---|---|---|
| FROM – TO | LT. or RT. | LIN. FT. | EACH | EACH | LIN. FT. | EACH | LIN. FT. | SQ. FT. | SQ. FT. | LIN. FT. | SQ. FT. | SQ. FT. | SQ. FT. | |
| 0+45–0+55 | ℄ | | | | | | | | 300 | | | | | 10'x30' |
| 0+87 | 18' RT | | | | | 1 | | | | | | | | TO BE REPLACED BY OWNER |
| 0+48–1+60 | 26' RT | 112 | | | | | | | | | | | | TO BE REPLACED BY OWNER |
| 0+38 | ℄ | | | | | | 50 | | | | | | | 15" DIA. |
| 0+60–0+90 | 24' LT | | | | | | | | | | 360 | | | 12'x30' |
| 1+10–1+40 | 24' LT | | | | | | | | | | 300 | | | 10'x30' |
| 0+80–0+95 | 18' RT | | | | | | | | | | | 170 | | 1908 RICE ST. |
| 1+69 | 2' LT | | | CASTING | | | | | | | | | | |
| 6+57 | 57' LT | | | CASTING | | | | | | | | | | |
| 6+90 | 55' LT | | | F.E.S. | | | | | | | | | | |
| 6+90 | 60' RT | | | F.E.S. | | | | | | | | | | |
| 7+20–8+60 | 18' LT | | | | 140 | | | | | | | | | |
| 7+20–8+60 | 16' RT | | | | 140 | | | | | | | | | |
| 8+18 | 56' LT | | | CASTING | | | | | | | | | | |
| 9+50–10+30 | 62' RT | 88 | | | | | | | | | | | | |
| 10+05 | 30' RT | | | | | | 30 | | | | | | | 12" DIA. |
| 9+93–10+85 | 18' RT | | | | 92 | | | | | | | | | |
| 10+07–11+53 | 18' LT | | | | 146 | | | | | | | | | |
| 10+00–11+07 | 20'–80' RT | | | | | | | | | 160 | | | | |
| 11+37–11+70 | 20'–80' RT | | | | | | | | | 80 | | | | |
| 11+25 | 62' RT | | | | | 1 | | | | | | | | |
| 11+10–11+35 | 20' RT | | | | | | | | | | | 1750 | | |
| 12+00 | 34' LT | | | | | 2 | | | | | | | | |
| 11+80 | ℄ | | | | | | 75 | | | | | | | 15" DIA. |
| 11+96–12+18 | 26' LT | | | | | | | | | | | 2000 | | 20'x100' |
| 10+00–11+00 | 33'–100' LT | 150 | | | | | | | | | | | | |
| 11+00–21+50 | 33' LT | 1050 | | | | | | | | | | | | |
| 11+40–13+25 | 20' RT | | | | | | | | | | | | 800 | STONE |
| 17+48–17+56 | 18' RT | | | | | | | | | | 240 | | | 8'x30' |
| 17+80 | 20' RT | | 1 | | | | | | | | | | | |
| 18+25 | ℄ | | | CASTING | | | | | | | | | | |
| 18+26 | 24' LT | | | HYDRANT | | | | | | | | | | DELIVER TO S.P.W.U. |
| 18+55 | 20' RT | | 1 | | | | | | | | | | | |
| 18+57 | 20'–48' RT | | | | | | | 84 | | | | | | 3'x28' |
| 19+48 | ℄ | | | CASTING | | | | | | | | | | |
| 19+50 | 33' LT | | | | | 1 | | | | | | | | |
| 21+03 | 18' RT | | | | | | | 100 | | | | | | STONE STEPS (4'x25') |
| 20+28 | 20' RT | | 1 | | | | | | | | | | | |
| 21+10 | 18' RT | | 2 | | | | | | | | | | | |
| 21+35 | 24' RT | | | | | | | | | | | | 100 | ALONG DRIVEWAY |
| 21+83 | ℄ | | | CASTING | | | | | | | | | | |
| 22+00 | 20' RT | | 2 | | | | | | | | | | | |
| 22+09–22+22 | 17' RT | | | | | | | | | | | 260 | | 13'x20' |
| 22+78 | 18' RT | | 1 | | | | | | | | | | | |
| 22+90–23+00 | 18' RT | | | | | | | | | | | 140 | | 10'x14' |
| 23+30 | 20' RT | | 2 | | | | | | | | | | | |
| 22+80–22+92 | 16' LT | | | | | | | | | | 240 | | | 12'x20' |

## WATER UTILITIES

| STATION | LOCATION | ITEM | REMARKS |
|---|---|---|---|
| 0+29 | 41' RT | HYD & G.V. | FURNISH & INSTALL |
| 0+35 | 33' LT | 12" B.F. VALVE | FURNISH & INSTALL |
| 0+35 | 30' RT | 12" B.F. VALVE | FURNISH & INSTALL |
| 0+29 | 47' LT | HYD & G.V. | FURNISH & INSTALL |
| 0+50 | 15' LT | 12" B.F. VALVE | FURNISH & INSTALL |
| 2+41 | 25' LT | 8" G.V. | FURNISH & INSTALL |
| 4+05 | 25' LT | 8" G.V. | FURNISH & INSTALL |
| 5+54 | 25' LT | 8" G.V. | FURNISH & INSTALL |
| 5+71 | 23' LT | HYD. & 6" G.V. | FURNISH & INSTALL (8'–0" BURY HYD.) |
| 8+00 | 30' LT | AIR VENT | INSTALL ( BY S.P.W.U. ) |
| 8+00 | 30' LT | 2 G.V. BOXES | ADJUST |
| 9+38 | 92' LT | 6" G.V. | FURNISH & INSTALL |
| 9+38 | 95' LT | MH | FURNISH & INSTALL |
| 10+93 | 22' LT | 12" B.F. VALVE | FURNISH & INSTALL |
| 10+73 | 50' LT | MH | RECONSTRUCT ( BY S.P.W.U. ) |
| 10+98 | 25' LT | 12" B.F. VALVE | FURNISH & INSTALL |
| 12+97 | 24' LT | G.V. | REMOVE |
| 12+97 | 29' LT | 6" G.V. | FURNISH & INSTALL |
| 18+23 | 12' LT | G.V. | ADJUST |

## WATER UTILITIES

| STATION | LOCATION | ITEM | REMARKS |
|---|---|---|---|
| 18+26 | 24' LT | HYD. | SALVAGE |
| 18+26 | 18'&27' LT | G.V. & HYD. | FURNISH & INSTALL |
| 19+37 | 40' RT | G.V. | ADJUST |
| 23+85 | 12' LT | G.V. | ADJUST |
| 18+27 | 45' RT | CURB STOP BOX | ADJUST–UP 0.6' |
| 21+78 | 28' LT | CURB STOP BOX | ADJUST–DOWN 0.5' |
| 22+65 | 26' LT | CURB STOP BOX | ADJUST–DOWN 0.5' |

## SILT FENCE INSTALLATION

| STATION | LOCATION | QUANTITY | REMARKS |
|---|---|---|---|
| 3+65 to 9+10 | 110' RT | 695' | EXTEND SILT FENCE UNDER BRIDGE |
| 6+00 to 9+10 | 100' LT | 410' | EXTEND SILT FENCE UNDER BRIDGE |
| 9+45 to 12+00 | 110' LT | 375' | EXTEND SILT FENCE UNDER BRIDGE |
| 9+45 to 10+80 | 110' RT | 255' | EXTEND SILT FENCE UNDER BRIDGE |

THE FOLLOWING STANDARD PLATES, AS APPROVED BY THE FHWA SHALL APPLY.

## STANDARD PLATES

| PLATE No. | DESCRIPTION |
|---|---|
| 0005A | SPECIFICATION REFERENCE TO STANDARD PLATES |
| 3000L | REINFORCED CONCRETE PIPE |
| 3006F | GASKET JOINT FOR RC PIPE |
| 3040F | CORRUGATED METAL PIPE CULVERT |
| 3100G | CONCRETE APRON FOR REINFORCED CONCRETE PIPE |
| 3123I | METAL APRON FOR CORRUGATED STEEL PIPE |
| 3124B | METAL APRON CONNECTION |
| 3134B | RIPRAP AT CMP OUTLETS |
| 3145E | CONCRETE PIPE TIES |
| 3221C | CORRUGATED STEEL PIPE COUPLING BANDS |
| 4000I | MANHOLE OR CATCH BASIN ( DESIGN A ) |
| 4002E | MANHOLE OR CATCH BASIN ( DESIGN C ) |
| 4005K | MANHOLE OR CATCH BASIN ( DESIGN F ) |
| 4010G | ADJUSTING RINGS |
| 4011D | PRECAST CONCRETE BASE |
| 4016D | CURB OPENING CATCH BASIN ( DESIGN LP ) |
| 4101C | RING CASTING FOR MANHOLE OR CATCH BASIN |
| 4110E | COVER CASTING FOR MANHOLE |
| 4140D | SPECIAL GRATE CASTING FOR CATCH BASIN |
| 4180H | MANHOLE OR CATCH BASIN STEP |
| 7035J | CONCRETE WALK |
| 7065C | BITUMINOUS CURB |
| 7100F | CONCRETE CURB AND GUTTER |
| 8000I | STANDARD BARRICADES |
| 8307N | STEEL PLATE BEAM GUARD RAIL |
| 8318C | GUARDRAIL ANCHORAGE PLATE FOR BRIDGES |
| 9102D | SODDING AT PIPE CULVERT ENDS |
| 9322J | CHAIN LINK FENCE |

## CLEAR AND GRUB CHART

| STATION | LT | RT | DESCRIPTION |
|---|---|---|---|
| 3+60 | | 25'–40' | BEGIN BRUSH |
| 4+10 | | 25'–40' | END BRUSH |
| 4+10 | | 25'–40' | BEGIN WOODS ( 13 TREES ) |
| 5+10 | | 25'–60' | END WOODS ( 13 TREES ) |
| 4+50 | 34' | | 10" TREE |
| 4+80 | 30' | | 8" TREE |
| 5+00 | 32' | | 15" TREE |
| 5+15 | 32' | | 12" TREE |
| 5+30 | | 30' | 8" TREE |
| 5+50 | 40' | | 2–36" WILLOWS |
| 5+60 | 35' | | 4 TREES |
| 6+00 | 25' | | 24" TREE |
| 6+50 | 25'–80' | | BEGIN WOODS |
| 9+00 | 25'–105' | | END WOODS |
| 5+60 | | 30'–60' | BEGIN WOODS |
| 8+50 | | 30'–110' | END WOODS |
| 9+55 | | 54' | TREE |
| 9+75 | | 40' | TREE |
| 9+90 | | 54' | TREE |
| 9+95 | 47'–105' | | BEGIN WOODS |
| 10+10 | 30'–105' | | WOODS |
| 10+45 | 20'–35' | | END WOODS |
| 10+23 | | 43' | TREE |
| 10+28 | | 51' | TREE |
| 10+88 | 28' | | 30" TREE |
| 12+20 | 40'–65' | | BEGIN PINES |
| 12+63 | 34' | | STUMP |
| 14+50 | 40'–55' | | END PINES |
| 14+50 | 40'–55' | | BEGIN SMALL TREES |
| 17+70 | 40'–55' | | END SMALL TREES |
| 18+32 | | 35'–48' | HEDGE |
| 19+10 | 38' | | 2 TREES |
| 20+70 | | 30' | 4" TREE |
| 21+25 | | 38' | 2–12" TREES |
| 21+95 | 33' | | TREE |
| 22+70 | 32' | | TREE |

28-117

© BONESTROO, ROSENE, ANDERLIK AND ASSOCIATES, INC. 1989

I HEREBY CERTIFY THAT THIS PLAN WAS PREPARED BY ME OR UNDER MY DIRECT SUPERVISION AND THAT I AM A DULY REGISTERED PROFESSIONAL ENGINEER/ARCHITECT UNDER THE LAWS OF THE STATE OF MINNESOTA. DATE 5/30/90 REG. NO. 16610 Thomas W. Peterson

| | |
|---|---|
| SURVEY | HBR |
| DRAWN | DFD |
| DESIGN | KLW |
| APPROV'D | TWP |

REVISIONS 10/17/91 STD. PLATES B.J.

BONESTROO, ROSENE, ANDERLIK & ASSOC., INC. Engineers & Architects St. Paul, Minnesota

RAMSEY COUNTY, MINNESOTA

DATE: OCT. 19, 1989 COMM. 21802

ROSELAWN AVENUE SCHEDULES & CHARTS RICE ST. to JACKSON ST. S.A.P. No. 62–626–04

SHEET 6/24

21802–20.DWG

# DRAINAGE CHART

| STATION | LOCATION (From ROW ℄) | No. | TYPE | DESIGN | CONSTRUCTION HEIGHT Lin. Ft. | CASTING ASSEMBLY | ELEVATION PROFILE | ELEVATION ORIGINAL GRATE | ELEVATION NEW GRATE | ELEVATION INVERT | ADJUST CASTING ASSEMBLY | RECONSTRUCT Lin. Ft. | INSTALL CASTING ASSEMBLY | FURNISH AND INSTALL PIPE SEWER: REINF. CONC. PIPE 12" | REINF. CONC. PIPE 15" | REINF. CONC. PIPE 18" | REINF. CONC. PIPE 36" | D.I.P. 8" | D.I.P. 10" | PVC 8" | CMP 15" | CMP 18" | | APRON | CLASS | DRAINS TO: STRUCTURE No. | DRAINS TO: INVERT ELEVATION | REMARKS |
|---|---|---|---|---|---|---|---|---|---|---|---|---|---|---|---|---|---|---|---|---|---|---|---|---|---|---|---|---|
| **EXISTING STRUCTURES** | | | | | | | | | | | | | | | | | | | | | | | | | | | | |
| 0+46 | 1' LT | 1-24 | MH | SANITARY | | | 861.86 | 862.07 | 861.82 | 850.18 | X | | ① | | | | | | | | | | | | | | | ADJUST |
| 1+69 | 2' LT | 1-23 | MH | SANITARY | | | 863.42 | 863.56 | 863.38 | 849.60 | X | | ① | | | | | | | | | | | | | | | ADJUST |
| 1+69 | 54' LT | 1-22 | MH | SANITARY | | | 863.42 | 865.8± | | 849.23 | | | | | | | | | | 52' | | | | | | | | PROTECT. CONNECT TO W/8" PVC |
| 4+09 | 54' LT | 1-21 | MH | SANITARY | | | 871.38 | 869.8± | | 848.03 | | | | | | | | | | | | | | | | | | REMOVE |
| 6+57 | 56' LT | 1-20 | MH | SANITARY | | | 830.92 | 866.90 | 874.6 | 847.06 | | 13.6 | ① | | | | | | | | | | | | | | | RECONSTRUCT |
| 6+57 | 105' RT | 1-19 | MH | SANITARY | | | 880.92 | 855.85 | | 841.86 | | | | | | | | | | | | | | | | | | PROTECT |
| 7+74 | 15' LT | 7 | MH | GAS | | | 886.04 | 882.57 | 885.54 | 874.0 | | | | | | | | | | | | | | | | | | RECONSTRUCT-BY OTHERS (TOP GAS-876.4) |
| 8+20 | 56' LT | 1-25 | MH | SANITARY | | | 887.66 | 870.49 | 881.0 | 847.45 | | 15.8 | ① | | | | | | 84' | | | | | | | | | RECONSTRUCT. CONNECT TO W/10" PVC |
| 10+73 | 50' LT | 9 | MH | WATER | | | 893.45 | 880.80 | 889.5 | | | | ① | | | | | | | | | | | | | | | RECONSTRUCT – BY OTHERS |
| 11+82 | 18' RT | 9A | SI | STORM | | | 893.86 | 890.32 | | | | | | | | | | | | | | | | | | | | REMOVE SIDE INLET |
| 11+95 | 16' LT | 10 | MH | GAS | | | 893.80 | 891.80 | 893.56 | 882.1 | | | ① | | | | | | | | | | | | | | | RECONSTRUCT-BY OTHERS (TOP GAS-885.8) |
| 18+25 | CENTERLINE | 4-35 | MH | SANITARY | | | 899.29 | 899.25 | 899.25 | 889.78 | | 5.3 | ① | | | | | | | | | | | | | | | RECONSTRUCT |
| 19+49 | CENTERLINE | 4-34 | MH | SANITARY | | | 899.79 | 899.55 | 899.75 | 889.02 | | 6.7 | ① | | | | | | | | | | | | | | | RECONSTRUCT |
| 21+83 | CENTERLINE | 4-33 | MH | SANITARY | | | 898.75 | 898.31 | 898.71 | 887.82 | | 7.0 | ① | | | | | | | | | | | | | | | RECONSTRUCT |
| 24+10 | 29' LT | 14 | MH | STORM | | | | | | | | | | | | | | | | | | | | | | | | Ⓐ |
| 24+19 | CENTERLINE | 4-31 | MH | SANITARY | | | | | | | | | | | | | | | | | | | | | | | | OK |
| **PROPOSED STRUCTURES** | | | | | | | | | | | | | | | | | | | | | | | | | | | | |
| 0+64 | 21.5' RT | 101 | CB | LP4-4 | | C | 861.99 | | 862.04 | 857.60 | | | | | | 20' | | | | | 54' | | | 15" | CMP | CB-33B,DITCH | | Ⓑ |
| 0+64 | 27.5' LT | 102 | CB | LP4-4 | | C | 861.99 | | 862.04 | 857.18 | | | | | 53' | | | | | | | | | | | 101 | | |
| 4+50 | 21.5' RT | 103 | CB | LP4-5 | | C | 871.15 | | 871.20 | 864.96 | | | | | 386' | | | | | | | | | | | 101 | | |
| 4+50 | 21.5' LT | 104 | CB | LP4-5 | | C | 871.15 | | 871.20 | 865.50 | | | | | 47' | | | | | | | | | | | 103 | | |
| 6+90 | 55' LT | | F.E. | | | | 882.44 | | | 860.87 | | | | | | | | | | | | | | | | | | Ⓒ |
| 6+90 | 60' RT | | F.E. | | | | 882.44 | | | 858.76 | | | | | | | | | | | | | | | | | | Ⓒ |
| 8+87 | CENTERLINE | | CULVERT | | | | 890.36 | | | 851.36 | | | | | | | 200' | | | | | | 2-36" | RCP | | | Ⓓ |
| 9+75 | 78' RT | 105 | MH | A or F | 9.3 | A | 891.92 | | 865.0 | 855.70 | | | | | | | | | | | 18' | | 15" | CMP | | | 2' SUMP |
| 10+13 | 22' RT | 106 | MH | A or F | 12.1 | A | 892.65 | | 891.5 | 879.41 | | | | | | | | | | | 67' | | | | 105 | | |
| 10+16 | 15' RT | 107 | CB | SP-2 | 5.0 | B | 892.69 | | 892.32 | 887.26 | | | | | 7' | | | | | | | | | | 106 | | |
| 10+34 | 25' LT | 108 | CB | SP-2 | 5.1 | B | 892.97 | | 892.59 | 887.50 | | | | | 46' | | | | | | | | | | 107 | | |
| 11+36 | 17' RT | 109 | MH | A or F | 6.3 | A | 893.92 | | 893.53 | 887.34 | | | | | 124' | | | | | | | | | | 106 | | |
| 11+36 | 74' RT | 110 | SD | C | | D | 893.92 | | 891.00 | 887.75 | | | | | 57' | | | | | | | | | | 109 | | LOCATE IN SWALE |
| 11+07 | 74' RT | 111 | SD | C | | D | 893.82 | | 891.00 | 887.90 | | | | | 29' | | | | | | | | | | 110 | | LOCATE IN SWALE |
| 12+63 | 15.5' RT | 112 | CB | LP4-5 | | C | 893.52 | | 893.57 | 888.80 | | | | | 126' | | | | | | | | | | 109 | 887.35 | |
| 16+00 | 15.5' RT | 113 | CB | LP4-5 | | C | 897.66 | | 897.71 | 893.00 | | | | | 337' | | | | | | | | | | 112 | 888.85 | |
| 16+00 | 27.5' LT | 114 | CB | LP4-4 | | C | 897.66 | | 897.71 | 893.52 | | | | | 47' | | | | | | | | | | 113 | 893.05 | |
| 12+63 | 27.5' LT | 112A | CB | LP4-4 | | C | 893.52 | | 893.57 | 889.32 | | | | | 47' | | | | | | | | | | 112 | 888.85 | |
| 19+03 | 20' RT | 116 | CB | LP4-5 | | C | 899.68 | | 899.73 | 894.56 | | | | | 303' | | | | | | | | | | 113 | 893.05 | |
| 19+95 | 21.5' RT | 117 | CB | LP4-5 | | C | 899.69 | | 899.74 | 895.06 | | | | | 92' | | | | | | | | | | 116 | 894.60 | |
| 23+69 | 21.5' LT | 118 | CB | LP4-4 | | C | 896.29 | | 896.34 | 891.96 | | | | | 41' | | | | | | | | | | 14 | | |
| 23+69 | 21.5' RT | 119 | CB | LP4-4 | | C | 896.29 | | 896.34 | 892.21 | | | | | 46' | | | | | | | | | | 118 | | CONNECT INTO EX. MH |
| 1+80 | 27' RT | 1 | MH | A OR F | 14.3 | A | 863.67 | | 863.80 | 849.45 | | | | | | | | | | 29' | | | | | | | | |
| 3+75 | 27' RT | 2 | MH | A OR F | 20.1 | A | 868.58 | | 868.70 | 848.63 | | | | | | | | | | 195' | | | | | | | | |
| 6+75 | 27' RT | 3 | MH | A OR F | 36.0 | A | 880.55 | | 880.70 | 844.68 | | | | | | | | 282' | | | | | | | | | | |
| 8+05 | 27' RT | 4 | MH | A OR F | 40.2 | A | 887.20 | | 887.20 | 847.09 | | | | | | | | | 148 | | | | | | | | | |
| | | | | | | | | | | | | | TOTALS | 0' | 1788' | 20' | 200' | 282' | 232' | 276' | 139' | 0' | | | | | | |

REVISED ℄ GRADE

REVISED ℄ GRADE

Ⓐ MANHOLE LOCATION APPROXIMATE. CASTING IS COVERED BY BITUMINOUS SURFACING.

Ⓑ TEMPORARY OUTLET THROUGH 15" CMP UNTIL 18" RCP IS INSTALLED IN RICE STREET IN FUTURE. PLACE 3 CY RIPRAP AT OUTLET.

Ⓒ REMOVE EXISTING FLARED END SECTION, BULKHEAD PIPE.

Ⓓ REMOVE EXISTING PIPE. REPLACE WITH 36" RCP FROM STA. 8+50, 90'R TO STA. 9+30, 100' L AND 2-36" FLARED END SECTIONS.

① FURNISH AND INSTALL NEW CASTING ASSEMBLY.

② SALVAGE CASTINGS, BULKHEAD PIPES, AND REMOVE MANHOLE

**REVISED 5/22/92 W.R.L., B.J.**

28-117

© BONESTROO, ROSENE, ANDERLIK AND ASSOCIATES, INC. 1989

I HEREBY CERTIFY THAT THIS PLAN WAS PREPARED BY ME OR UNDER MY DIRECT SUPERVISION AND THAT I AM A DULY REGISTERED PROFESSIONAL ENGINEER/ARCHITECT UNDER THE LAWS OF THE STATE OF MINNESOTA. DATE 5/22/90 REG. NO. 16682 Thomas W. Stevens

| | |
|---|---|
| SURVEY | HBR |
| DRAWN | DFD |
| DESIGN | TWP |
| APPROV'D | MLS |

REVISIONS

BONESTROO, ROSENE, ANDERLIK & ASSOC., INC.
Engineers & Architects
St. Paul, Minnesota

RAMSEY COUNTY, MINNESOTA
DATE: OCT. 19, 1989 COMM. 21802

ROSELAWN AVENUE
DRAINAGE CHART
RICE ST. to JACKSON ST.
S.A.P. No. 62-626-04

SHEET 7/24

21802-21.DWG

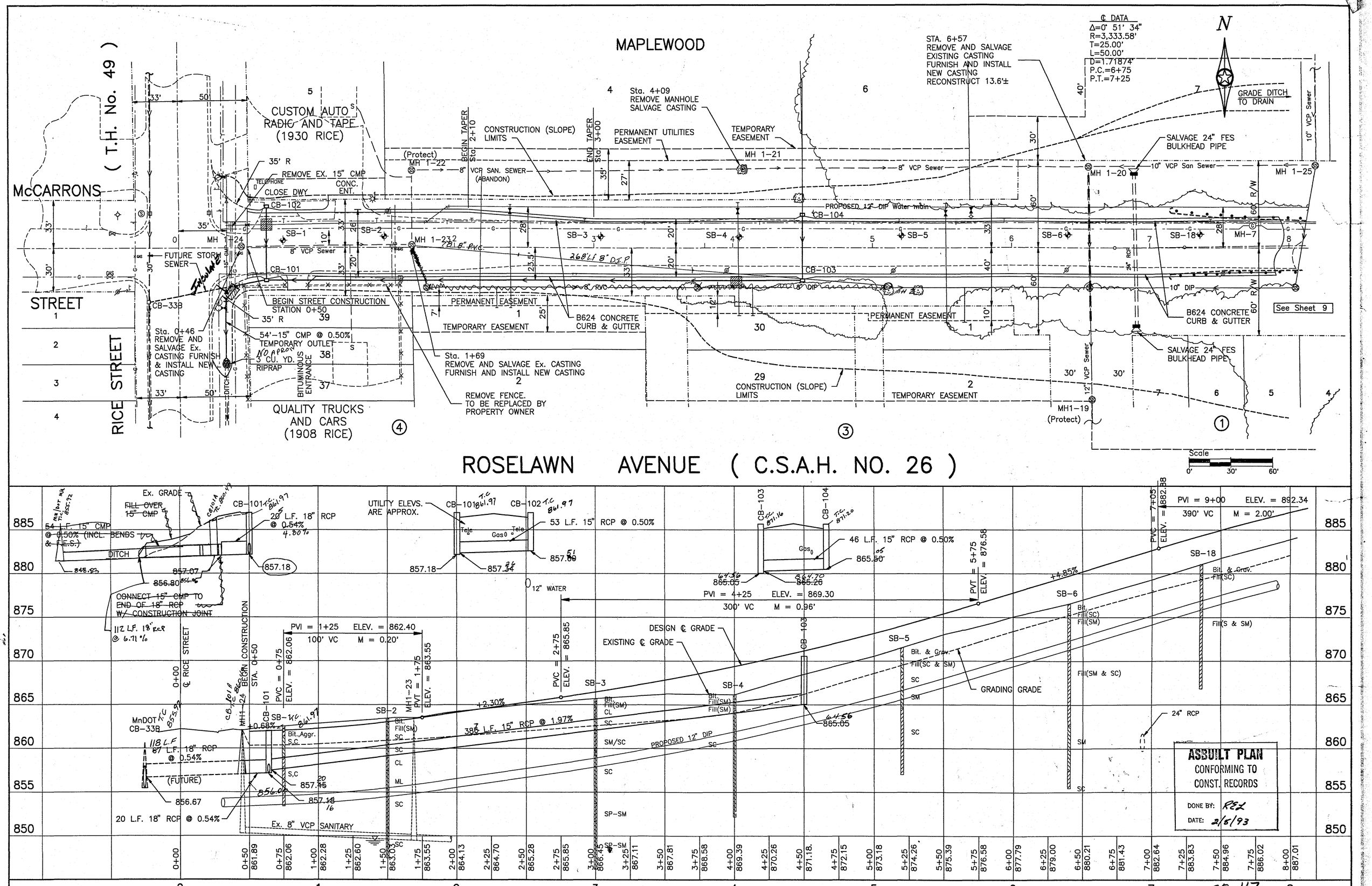


© BONESTROO, ROSENE, ANDERLIK, AND ASSOCIATES, INC. 1989

I HEREBY CERTIFY THAT THIS PLAN WAS PREPARED BY ME OR UNDER MY DIRECT SUPERVISION AND THAT I AM A DULY REGISTERED PROFESSIONAL ENGINEER/ARCHITECT UNDER THE LAWS OF THE STATE OF MINNESOTA. DATE 5/30/90 REG. NO. 16110 Thomas W. Peterson

| | | |
|---|---|---|
| SURVEY | HBR | REVISIONS |
| DRAWN | DFD | |
| DESIGN | TWP | |
| APPROV'D | MLS | |

BONESTROO, ROSENE, ANDERLIK & ASSOC., INC. Engineers & Architects
St. Paul, Minnesota

RAMSEY COUNTY, MINNESOTA
DATE: OCT. 19, 1989 COMM. 21802

ROSELAWN AVENUE
STREET & STORM SEWER CONSTRUCTION
RICE ST. to JACKSON ST.
S.A.P. No. 62-626-04

SHEET 8/24

21802-05

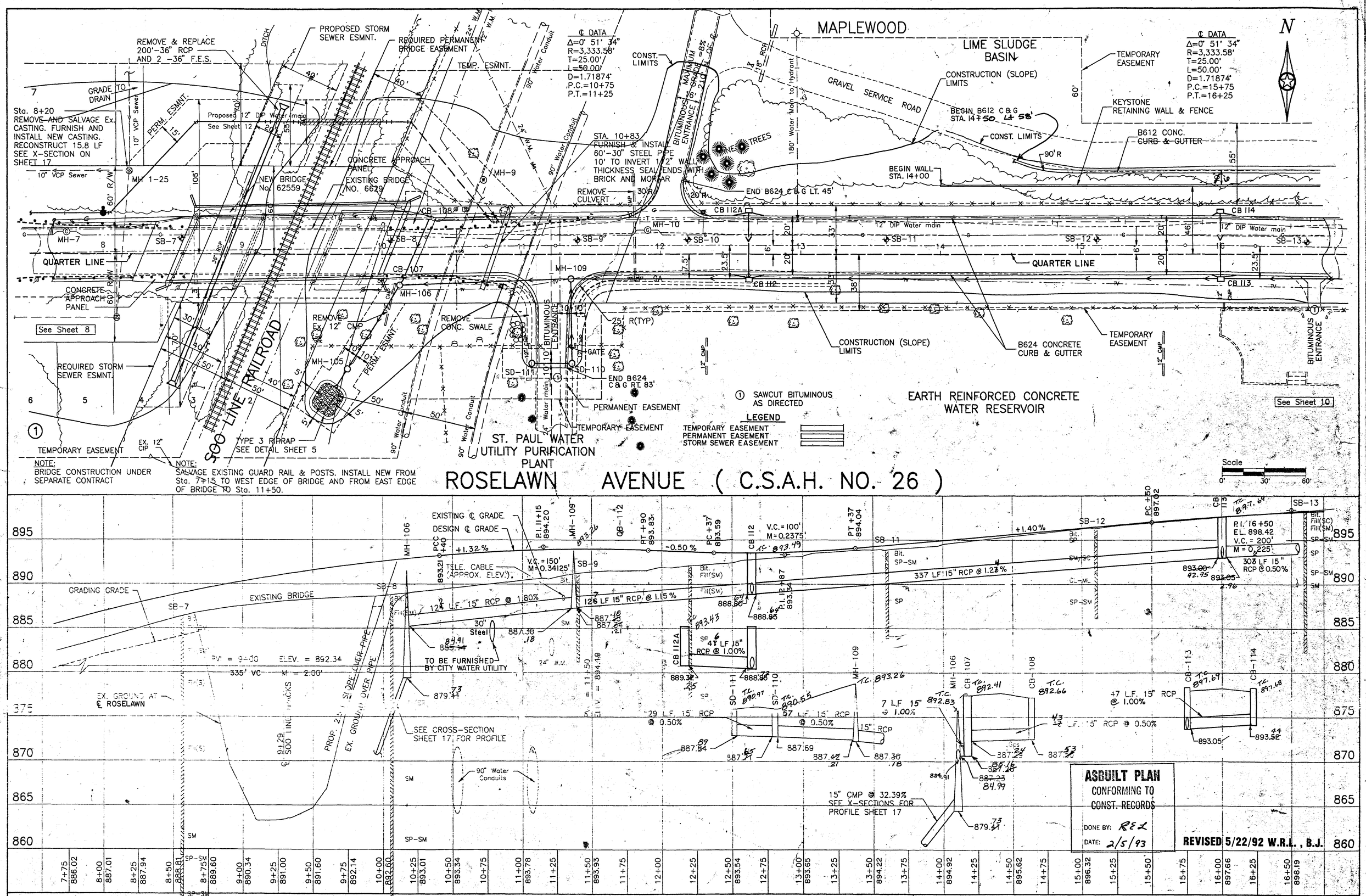


© BONESTROO, ROSENE, ANDERLIK, AND ASSOCIATES, INC. 1990

I HEREBY CERTIFY THAT THIS PLAN WAS PREPARED BY ME OR UNDER MY DIRECT SUPERVISION AND THAT I AM A DULY REGISTERED PROFESSIONAL ENGINEER/ARCHITECT UNDER THE LAWS OF THE STATE OF MINNESOTA.
DATE — REG. NO.

| | |
|---|---|
| SURVEY | HBR |
| DRAWN | DFD |
| DESIGN | TWP |
| APPROV'D | MLS |

REVISIONS
R/W - JAP - BJ 6/10
GRADE - SB 5/92

BONESTROO, ROSENE, ANDERLIK & ASSOC., INC.
Engineers & Architects
St. Paul, Minnesota

RAMSEY COUNTY, MINNESOTA
DATE: OCT. 19, 1989 COMM. 21802

ROSELAWN AVENUE
STREET & STORM SEWER CONSTRUCTION
RICE ST. to JACKSON ST.
S.A.P. No. 62-626-04

SHEET 9/24

28-117

21802-06.DWG

REVISED 5/22/92 W.R.L. , B.J.

28-117

© BONESTROO, ROSENE, ANDERLIK, 1990

I HEREBY CERTIFY THAT THIS PLAN WAS PREPARED BY ME OR UNDER MY DIRECT SUPERVISION AND THAT I AM A DULY REGISTERED PROFESSIONAL ENGINEER/ARCHITECT UNDER THE LAWS OF THE STATE OF MINNESOTA.
DATE 5/30/90 REG. NO. 16610 Thomas W. Peterson

| | |
|---|---|
| SURVEY | HBR |
| DRAWN | DFD |
| DESIGN | TWP |
| APPROV'D | MLS |

REVISIONS

BONESTROO, ROSENE, ANDERLIK & ASSOC., INC.
Engineers & Architects
St. Paul, Minnesota

RAMSEY COUNTY, MINNESOTA
DATE: OCT. 19, 1989 COMM. 21802

ROSELAWN AVENUE
STREET & STORM SEWER CONSTRUCTION
RICE ST. to JACKSON ST.
S.A.P. No. 62-626-04



21802A08.DWG

NOTE:
TELEPHONE LINE CONSISTS OF 2– 2 1/2" DIA. DIRECT BURY CABLES.
GAS MAIN IS 6" WELDED STEEL.

NOTE:
PLACE WATER EASEMENT MARKERS AT HORIZONTAL BENDS AND/OR EVERY 250'. PLACE MARKERS AT OFFROAD MANHOLES AND FLARED ENDS.

℄ DATA
Δ=0° 51' 34"
R=3,333.58'
T=25.00'
L=50.00'
D=1.71874°
P.C.=6+75
P.T.=7+25

Sta. 0+64
FURNISH AND INSTALL
64 SF 2" INSULATION

Sta. 1+95
FURNISH AND INSTALL
1–12" 45° BEND

Sta. 1+79
FURNISH AND INSTALL
1–12" 45° BEND

Sta. 5+71
FURNISH AND INSTALL
1–12" x 6" TEE
5'–6" DIP
1–6" GATE VALVE
1–6" HYDRANT (8'–0" BURY)
Elev = 879.1±

( T.H. No. 49 )

McCARRONS STREET

RICE STREET

CUSTOM AUTO RADIO AND TAPE (1930 RICE)

QUALITY TRUCKS AND CARS (1908 RICE)

35'–12" DIP
1–12" x 6" TEE
1–6" GATE VALVE
1–6" HYDRANT
6 LF–6" DIP
1–12" TAPPED PLUG
1–12" BUTTERFLY VALVE

12" BUTTERFLY VALVE

12"x12" TEE

FUTURE STORM SEWER

CB–33B
128' SF–2" INSUL.
60'–12" DIP
1–12" x 6" TEE
1–6" GATE VALVE
1–6" HYDRANT
6 LF–6" DIP
1–12" TAPPED PLUG
1–12" BUTTERFLY VALVE

12" CMP TEMPORARY OUTLET

BEGIN STREET CONSTRUCTION
STATION 0+50
35' R

BITUMINOUS ENTRANCE

Sta. 1+25
REPAIR EXISTING WYE, RISER, SERVICE AND MAIN PIPE.
(Ex. RISER=4'–8")

Sta.2+31
FURNISH AND INSTALL
13 LF–6" PVC SERVICE
1–6" PLUG

Sta. 2+41
FURNISH AND INSTALL
1–12" x 8" CROSS
1–8" GATE VALVE
68 LF–8" DIP SERVICE
2–8" TAPPED PLUGS

Sta. 4+05
FURNISH AND INSTALL
1–12" x 8" CROSS
1–8" GATE VALVE
73 LF–8" DIP SERVICE
2–8" TAPPED PLUGS
1–8" 22 1/2° BEND

Sta. 4+15
FURNISH AND INSTALL
10 LF–6" RISER
18 LF–6" DIP SERVICE
1–6" PLUG

Sta. 5+54
FURNISH AND INSTALL
1–12" x 8" CROSS
1–8" GATE VALVE
78 LF–8" DIP SERVICE
2–8" TAPPED PLUGS
1–8" 22 1/2° BEND

Sta. 5+64
10 LF–6" RISER
18 LF–6" DIP SERVICE
1–6" PLUG

Sta. 4+05
FURNISH AND INSTALL
64 SF 2" INSULATION

REMOVE FENCE.S TO BE REPLACED BY PROPERTY OWNER

TEMPORARY EASEMENT

CONSTRUCTION (SLOPE) LIMITS

PERMANENT UTILITIES EASEMENT

PERMANENT EASEMENT

B624 CONCRETE CURB & GUTTER

9.5' RISER NORTH
13.5' RISER NORTH
13.5' RISER NORTH (CRACKED)
16.5' RISER NORTH

BEGIN TAPER Sta. 2+10
END TAPER Sta. 3+00

MH 1–22
MH 1–21
MH 1–20
MH 1–25
MH1–24
MH 1–23
MH–1
MH–2
MH–3
MH–4
MH–7
MH1–19

CB–101
CB–102
CB–103
CB–104

SB–1
SB–2
SB–3
SB–4
SB–5
SB–6
SB–18

8" VCP Sewer (ABANDON)
10" VCP Sewer (Abandon)
10" VCP Sewer
12" DIP Water main
8" VCP Sewer
12" DIP
78 LF PVC
242 8" DIP
24" RCP

See Sheet 12

TELEPHONE
GAS
DITCH

Scale
0' 30' 60'

# ROSELAWN AVENUE ( C.S.A.H. NO. 26 )

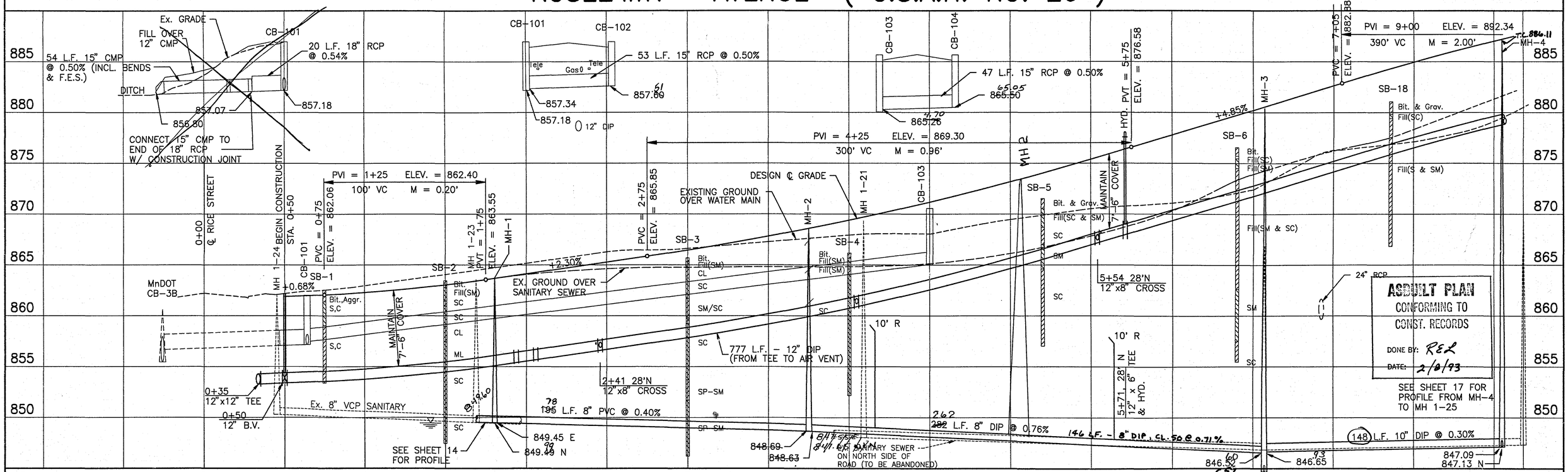


28–117

© BONESTROO, ROSENE, ANDERLIK, AND ASSOCIATES, INC. 1990

I HEREBY CERTIFY THAT THIS PLAN WAS PREPARED BY ME OR UNDER MY DIRECT SUPERVISION AND THAT I AM A DULY REGISTERED PROFESSIONAL ENGINEER/ARCHITECT UNDER THE LAWS OF THE STATE OF MINNESOTA.
DATE 5/30/90 REG. NO. 16610 Thomas W. Peterson

| | |
|---|---|
| SURVEY | HBR |
| DRAWN | DFD |
| DESIGN | TWP |
| APPROV'D | MLS |

REVISIONS

BONESTROO, ROSENE, ANDERLIK & ASSOC., INC.
Engineers & Architects
St. Paul, Minnesota

RAMSEY COUNTY, MINNESOTA
DATE: OCT. 19, 1989 COMM. 21802

ROSELAWN AVENUE
UTILITY CONSTRUCTION
RICE ST. to JACKSON ST.
S.A.P. No. 62–626–04

SHEET 11/24

21802–08.DWG

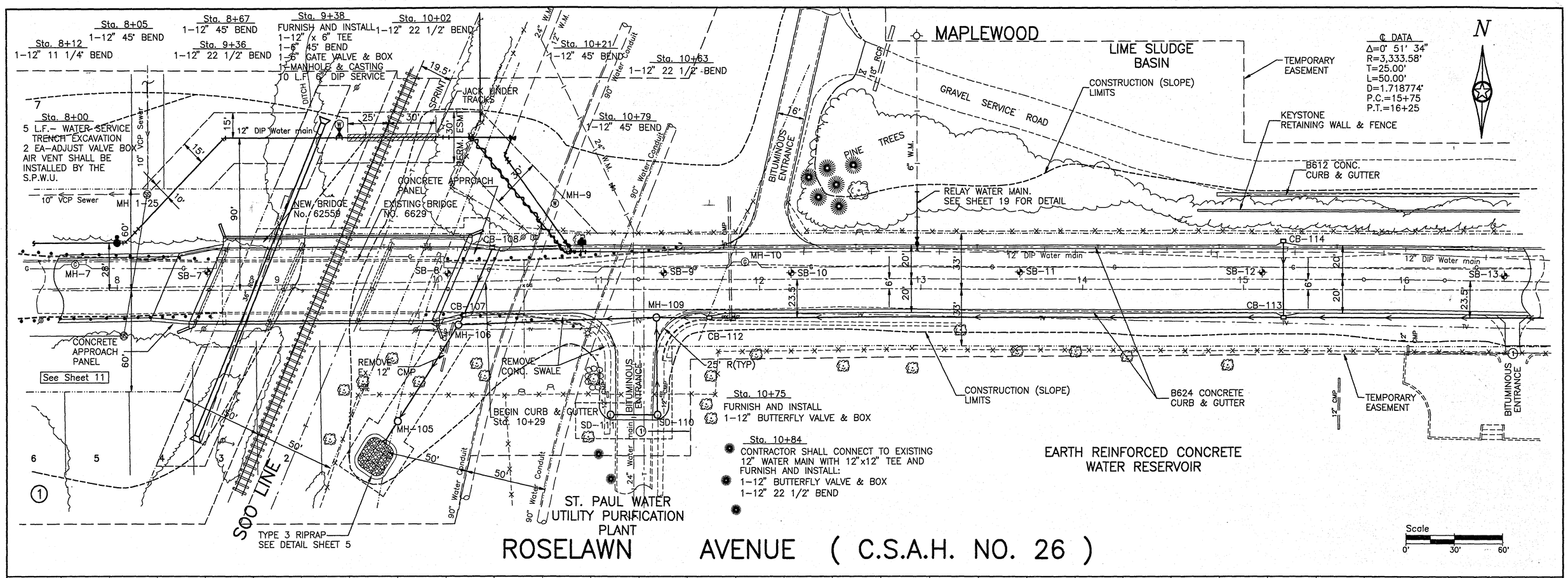


# ROSELAWN AVENUE ( C.S.A.H. NO. 26 )

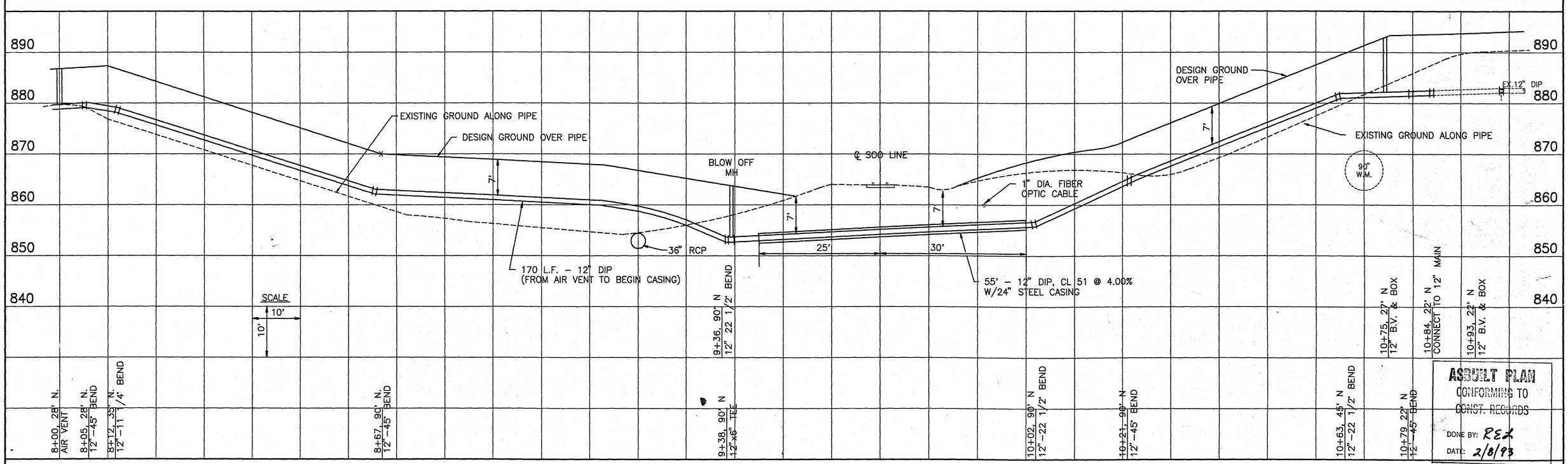


AS BUILT PLAN
CONFORMING TO
CONST. RECORDS
DONE BY: REL
DATE: 2/8/93

28-1480

© BONESTROO, ROSENE, ANDERLIK, AND ASSOCIATES, INC. 1989

I HEREBY CERTIFY THAT THIS PLAN WAS PREPARED BY ME OR UNDER MY DIRECT SUPERVISION AND THAT I AM A DULY REGISTERED PROFESSIONAL ENGINEER/ARCHITECT/AND/OR THE LAWS OF THE STATE OF MINNESOTA.
DATE 5/30/90 REG. NO. 16610 Thomas W. Peterson

| | |
|---|---|
| SURVEY | HBR |
| DRAWN | DFD |
| DESIGN | TWP |
| APPROV'D | MLS |

REVISIONS

BONESTROO, ROSENE, ANDERLIK & ASSOC., INC.
Engineers & Architects
St. Paul, Minnesota

RAMSEY COUNTY, MINNESOTA
DATE: OCT. 19, 1989 COMM. 21802

ROSELAWN AVENUE
UTILITY CONSTRUCTION
RICE ST. to JACKSON ST.
S.A.P. No. 62-626-04

SHEET 12/24

21802-09

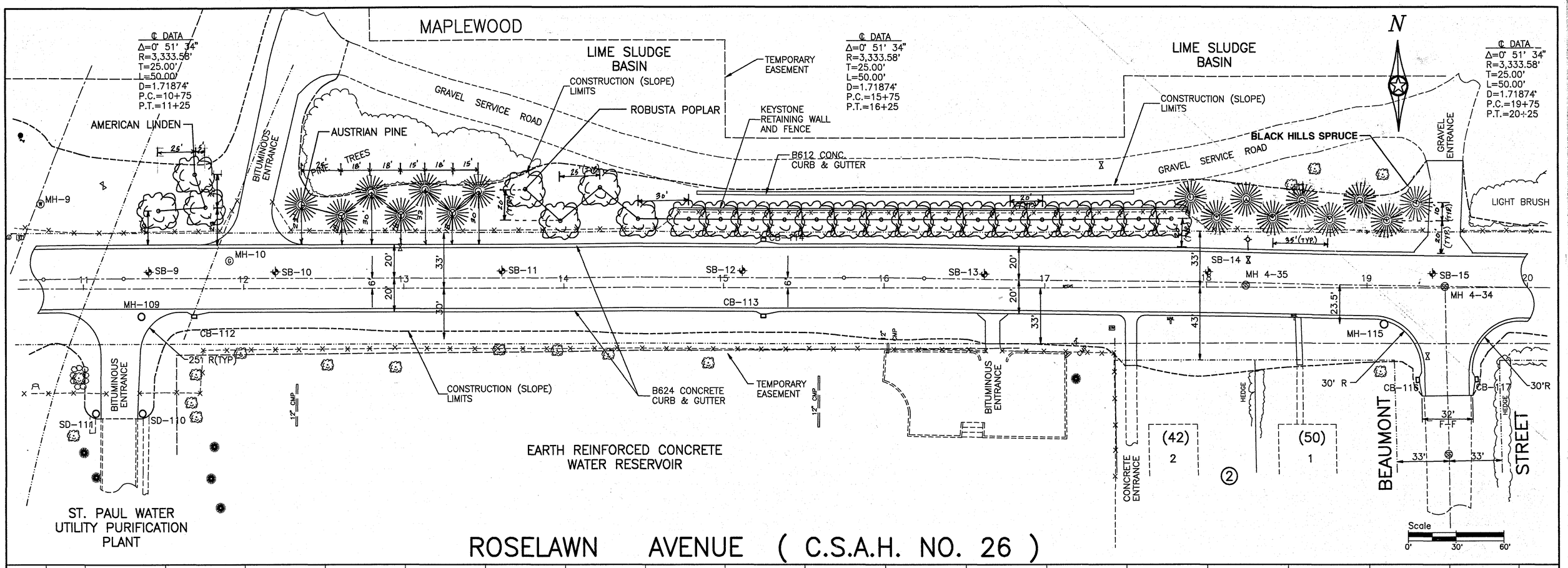


© BONESTROO, ROSENE, ANDERLIK, AND ASSSOCIATES, INC. 1990

I HEREBY CERTIFY THAT THIS PLAN WAS PREPARED BY ME OR UNDER MY DIRECT SUPERVISION AND THAT I AM A DULY REGISTERED PROFESSIONAL ENGINEER/ARCHITECT UNDER THE LAWS OF THE STATE OF MINNESOTA.
DATE 5/30/90 REG. NO. 16610 Thomas W. Peterson

| | |
|---|---|
| SURVEY | HBR |
| DRAWN | DFD |
| DESIGN | TWP |
| APPROV'D | MLS |

REVISIONS
5/7 BLACK HILLS SPRUCE

BONESTROO, ROSENE, ANDERLIK & ASSOC., INC.
Engineers & Architects
St. Paul, Minnesota

RAMSEY COUNTY, MINNESOTA
DATE: OCT. 19, 1989 COMM. 21802

ROSELAWN AVENUE
LANDSCAPE PLAN
RICE ST. to JACKSON ST.
S.A.P. No. 62-626-04

28-117

SHEET 13/24

21802-24.DWG

Fed. Proj. No.

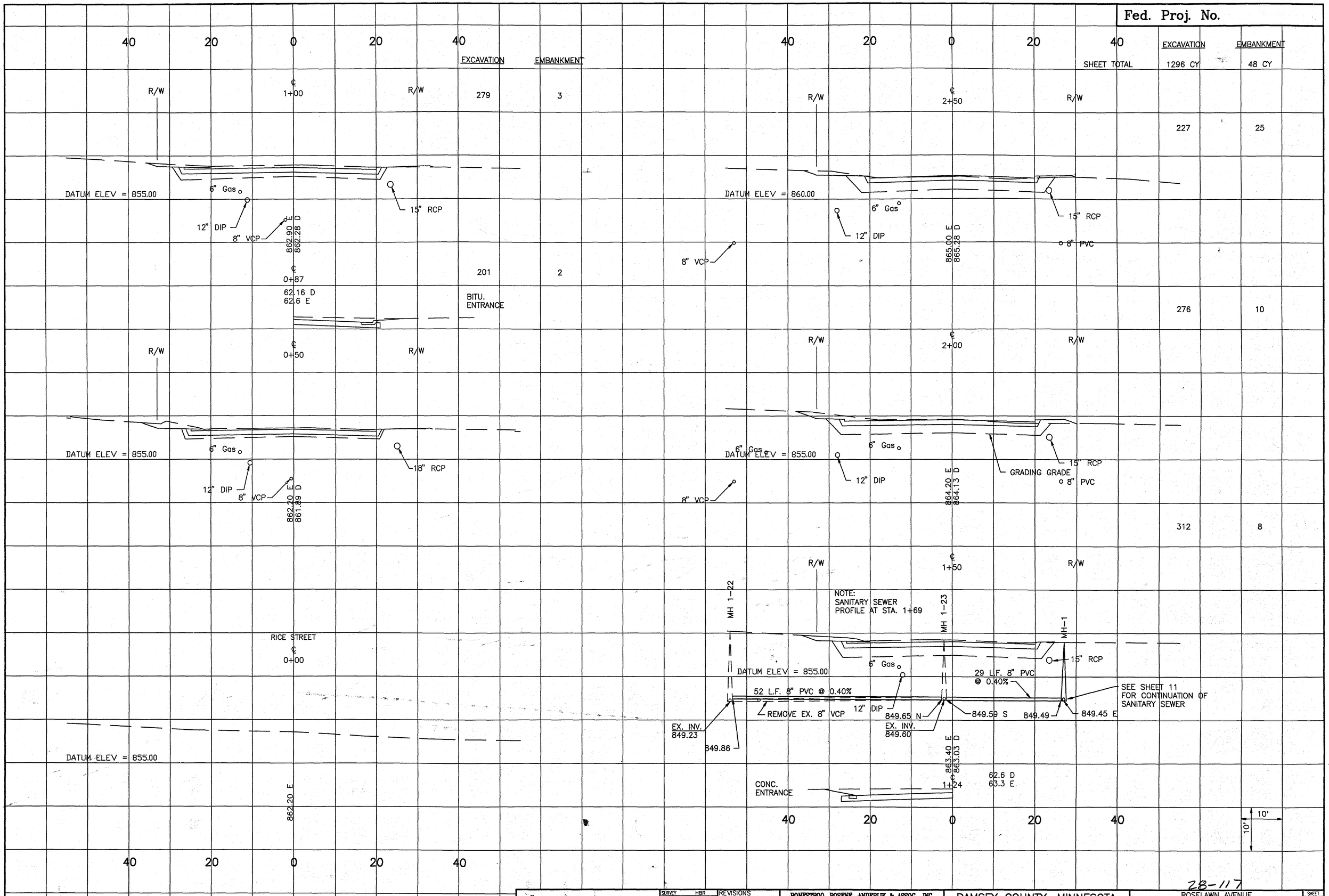


| EXCAVATION | EMBANKMENT |
|---|---|
| SHEET TOTAL 1296 CY | 48 CY |
| 227 | 25 |
| 276 | 10 |
| 312 | 8 |

28-117

©BONESTROO, ROSENE, ANDERLIK & ASSOCIATES, INC. 1989

| | |
|---|---|
| SURVEY | HBR |
| DRAWN | DFD |
| DESIGN | TWP |
| APPROVD | MLS |

REVISIONS

BONESTROO, ROSENE, ANDERLIK & ASSOC., INC.
ENGINEERS & ARCHITECTS
St. Paul, Minnesota

RAMSEY COUNTY, MINNESOTA

DATE: OCT. 19, 1989 COMM. 21802

ROSELAWN AVENUE
X-SECTIONS
Sta. 0+00 to Sta. 2+50

SHEET 14/24

S.A.P. 62-626-04

21802-10

Fed. Proj. No.

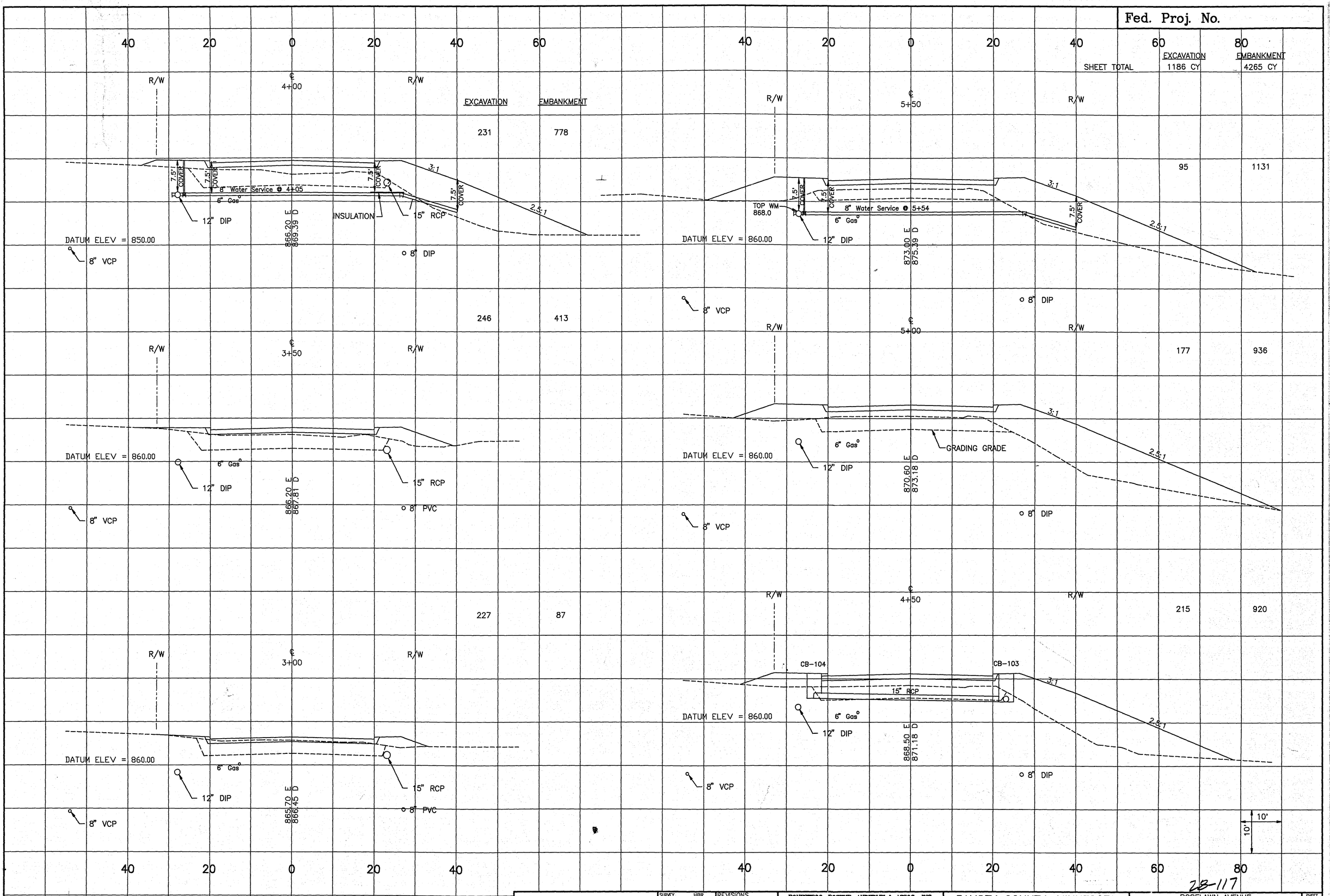


| | EXCAVATION | EMBANKMENT |
|---|---|---|
| | 231 | 778 |
| | 246 | 413 |
| | 227 | 87 |

| | EXCAVATION | EMBANKMENT |
|---|---|---|
| SHEET TOTAL | 1186 CY | 4265 CY |
| | 95 | 1131 |
| | 177 | 936 |
| | 215 | 920 |

©BONESTROO, ROSENE, ANDERLIK & ASSOCIATES, INC. 1989

| | |
|---|---|
| SURVEY | HBR |
| DRAWN | DFD |
| DESIGN | TWP |
| APPROVED | MLS |

REVISIONS

BONESTROO, ROSENE, ANDERLIK & ASSOC., INC.
ENGINEERS & ARCHITECTS
St. Paul, Minnesota

RAMSEY COUNTY, MINNESOTA
DATE: OCT. 19, 1989 COMM. 21802

28-117

ROSELAWN AVENUE
X-SECTIONS
Sta. 3+00 to Sta. 5+50

SHEET 15/24

S.A.P. 62-626-04

21802-11

Fed. Proj. No.

| | EXCAVATION | EMBANKMENT |
|---|---|---|
| SHEET TOTAL | 347 CY | 8550 CY |

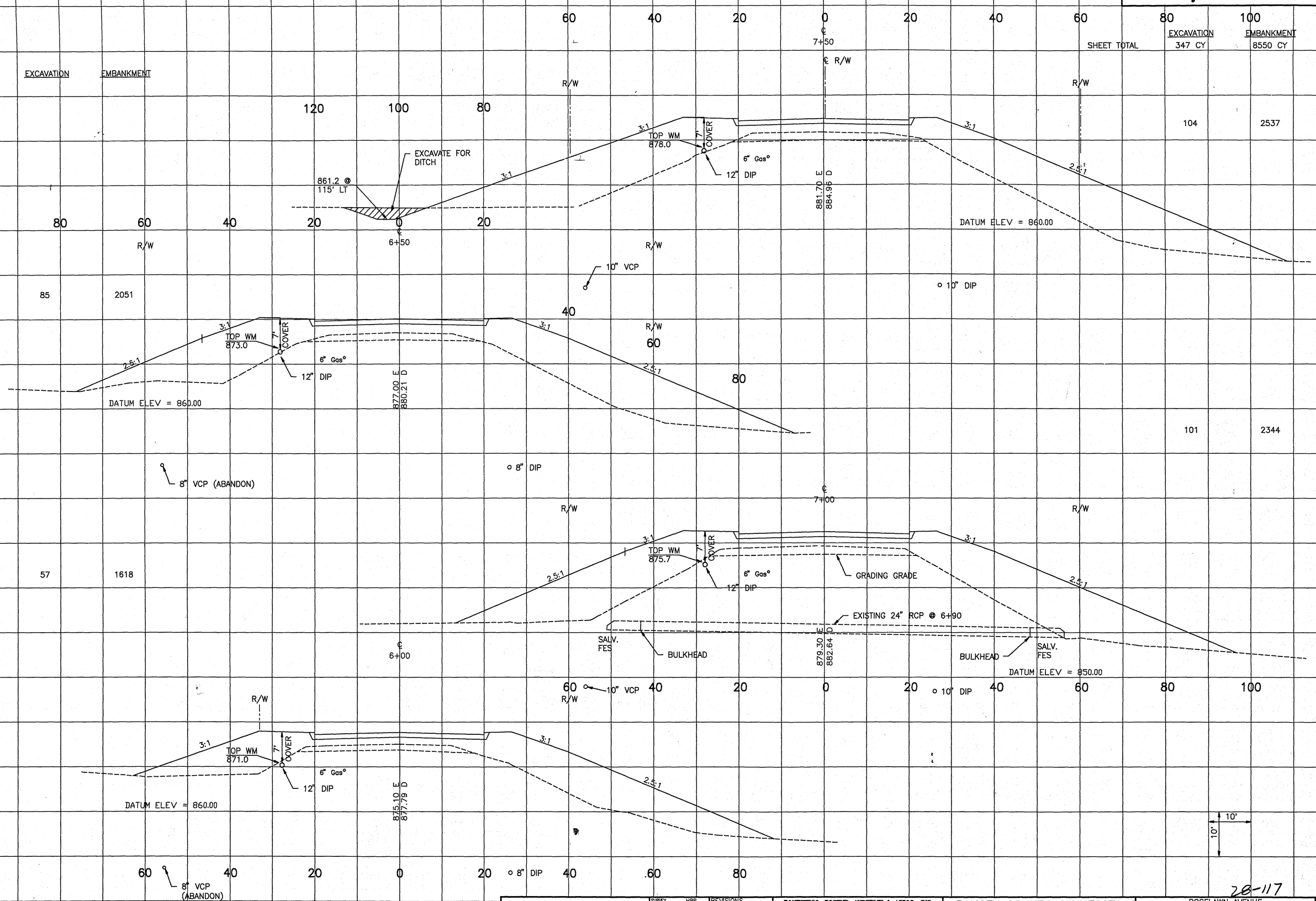


28-117

©BONESTROO, ROSENE, ANDERLIK & ASSOCIATES, INC. 1989

| | |
|---|---|
| SURVEY | HBR |
| DRAWN | DFD |
| DESIGN | TWP |
| APPROVD | MLS |

REVISIONS

BONESTROO, ROSENE, ANDERLIK & ASSOC., INC.
ENGINEERS & ARCHITECTS
St. Paul, Minnesota

RAMSEY COUNTY, MINNESOTA
DATE: OCT. 19, 1989 COMM. 21802

ROSELAWN AVENUE
X-SECTIONS
Sta. 6+00 to 7+50

SHEET 16/24

S.A.P. 62-626-04

21802-12

Fed. Proj. No.

| | EXCAVATION | EMBANKMENT |
|---|---|---|
| SHEET TOTAL | 167 CY | 4315 CY |
| | 41 | 1596 |
| | 126 | 2719 |

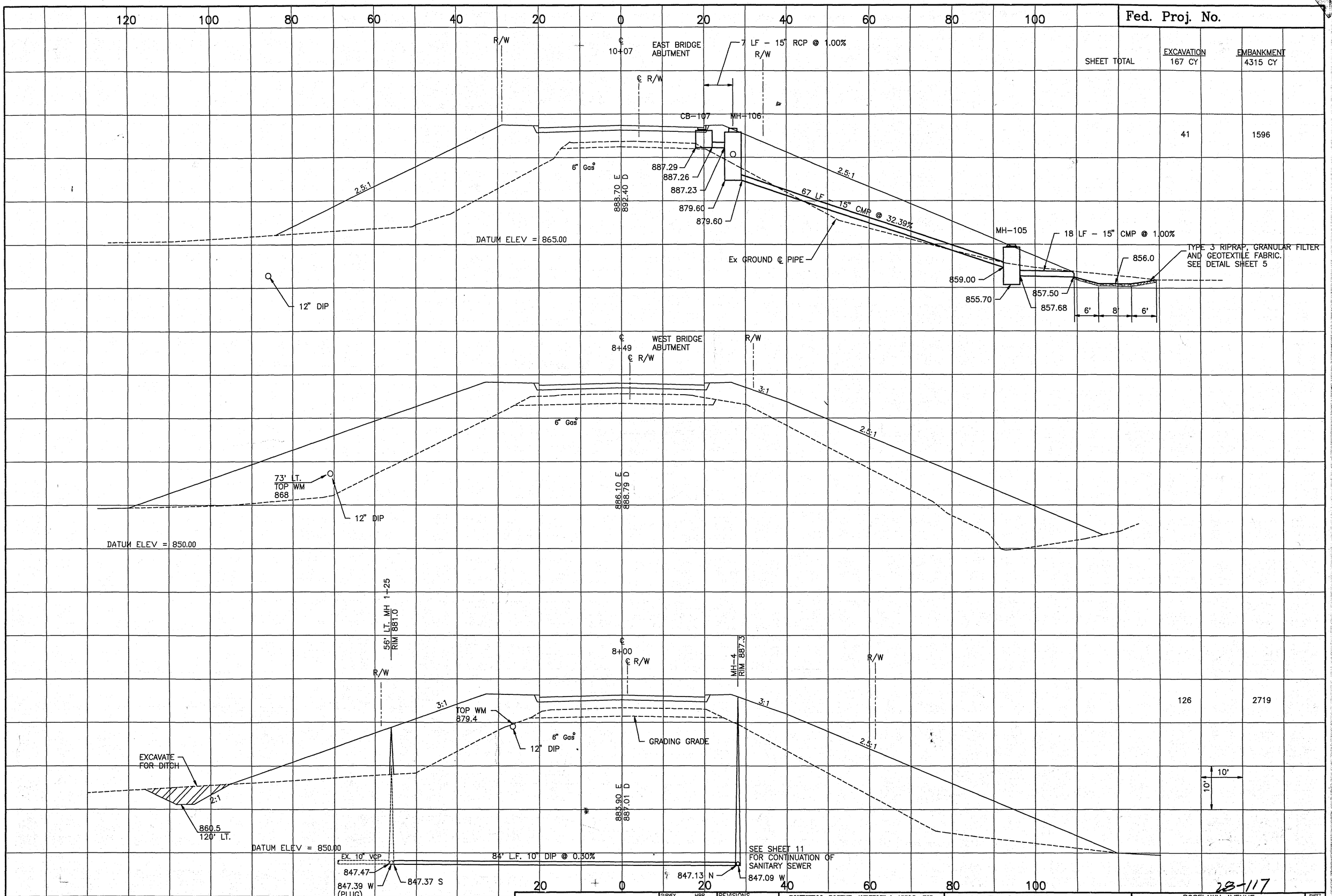


23-117

©BONESTROO, ROSENE, ANDERLIK & ASSOCIATES, INC. 1989

| | | |
|---|---|---|
| SURVEY | HBR | REVISIONS |
| DRAWN | DFD | |
| DESIGN | TWP | |
| APPROV'D | MLS | |

BONESTROO, ROSENE, ANDERLIK & ASSOC., INC.
ENGINEERS & ARCHITECTS
St. Paul, Minnesota

RAMSEY COUNTY, MINNESOTA
DATE: OCT. 19, 1989 COMM. 21802

ROSELAWN AVENUE
X–SECTIONS
Sta. 8+00 to 10+07
S.A.P. 62–626–04

SHEET 17/24

21802–13

Fed. Proj. No.

| | EXCAVATION | EMBANKMENT |
|---|---|---|
| SHEET TOTAL | 255 CY | ~~2278~~ 2270 CY |
| | 94 ✓ | ~~445~~ 437 |
| | 88 ✓ | 707 ✓ |
| | 73 ✓ | 1126 ✓ |

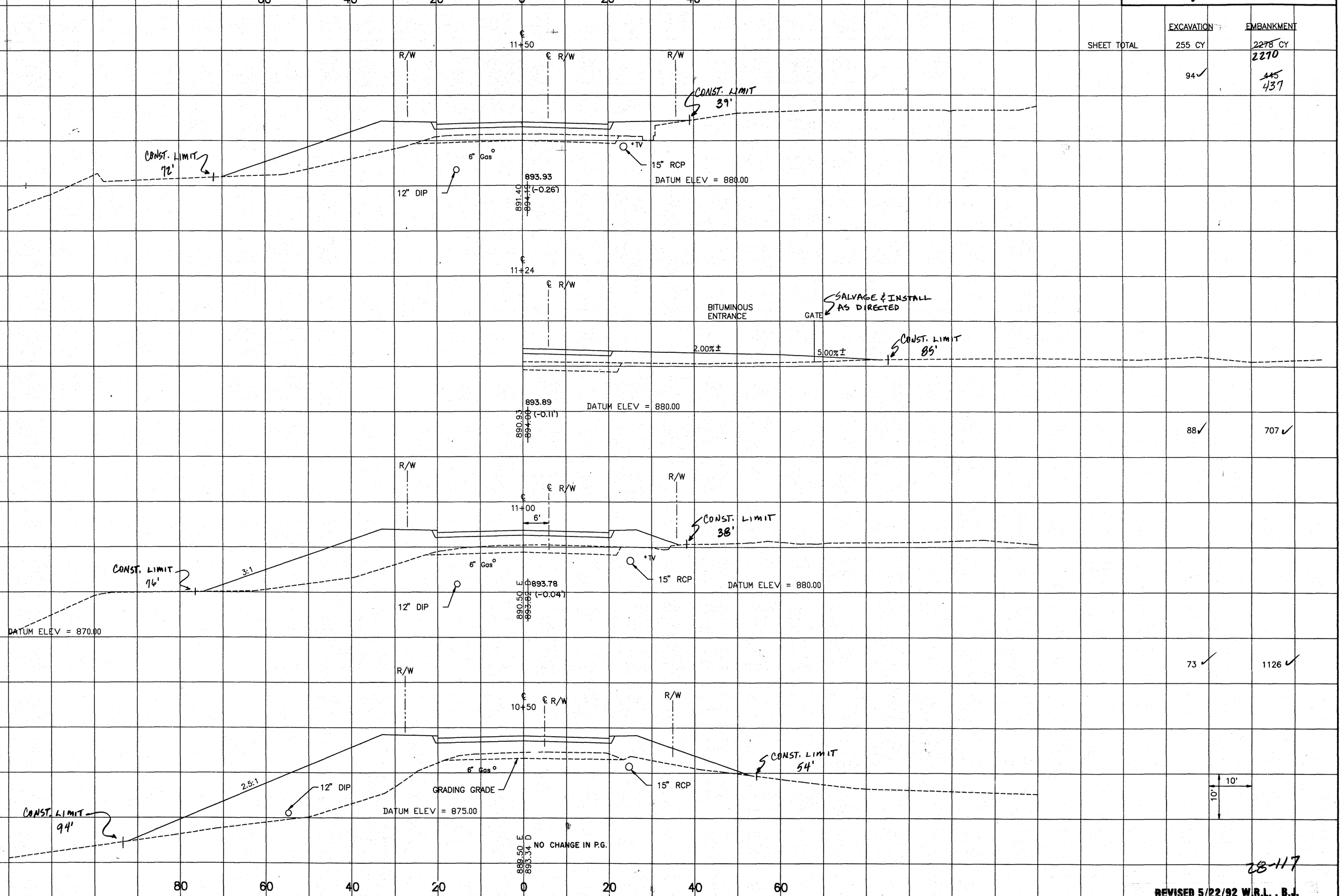


28-117

REVISED 5/22/92 W.R.L., B.J.

©BONESTROO, ROSENE, ANDERLIK & ASSOCIATES, INC. 1989

| | |
|---|---|
| SURVEY | HBR |
| DRAWN | DFD |
| DESIGN | TWP |
| APPROVD | MLS |

REVISIONS

BONESTROO, ROSENE, ANDERLIK & ASSOC., INC.
ENGINEERS & ARCHITECTS
St. Paul, Minnesota

RAMSEY COUNTY, MINNESOTA
DATE: OCT 1?, 1989 COMM. 21802

ROSELAWN AVENUE
X-SECTIONS
Sta. 10+50 to Sta. 11+50
S.A.P. 62-626-04

SHEET 18/24

21802-15

Fed. Proj. No.

| SHEET TOTAL | EXCAVATION | EMBANKMENT |
|---|---|---|
| | ~~295~~ CY 589 | ~~1250~~ CY 932 |
| | ~~56~~ 173 | ~~311~~ 164 |
| | ~~66~~ 166 | ~~345~~ 196 |
| (12+00–12+50) | 94 ✓ | ~~286~~ 154 |
| (12+50–13+00) | ~~79~~ 156 | ~~308~~ 218 |

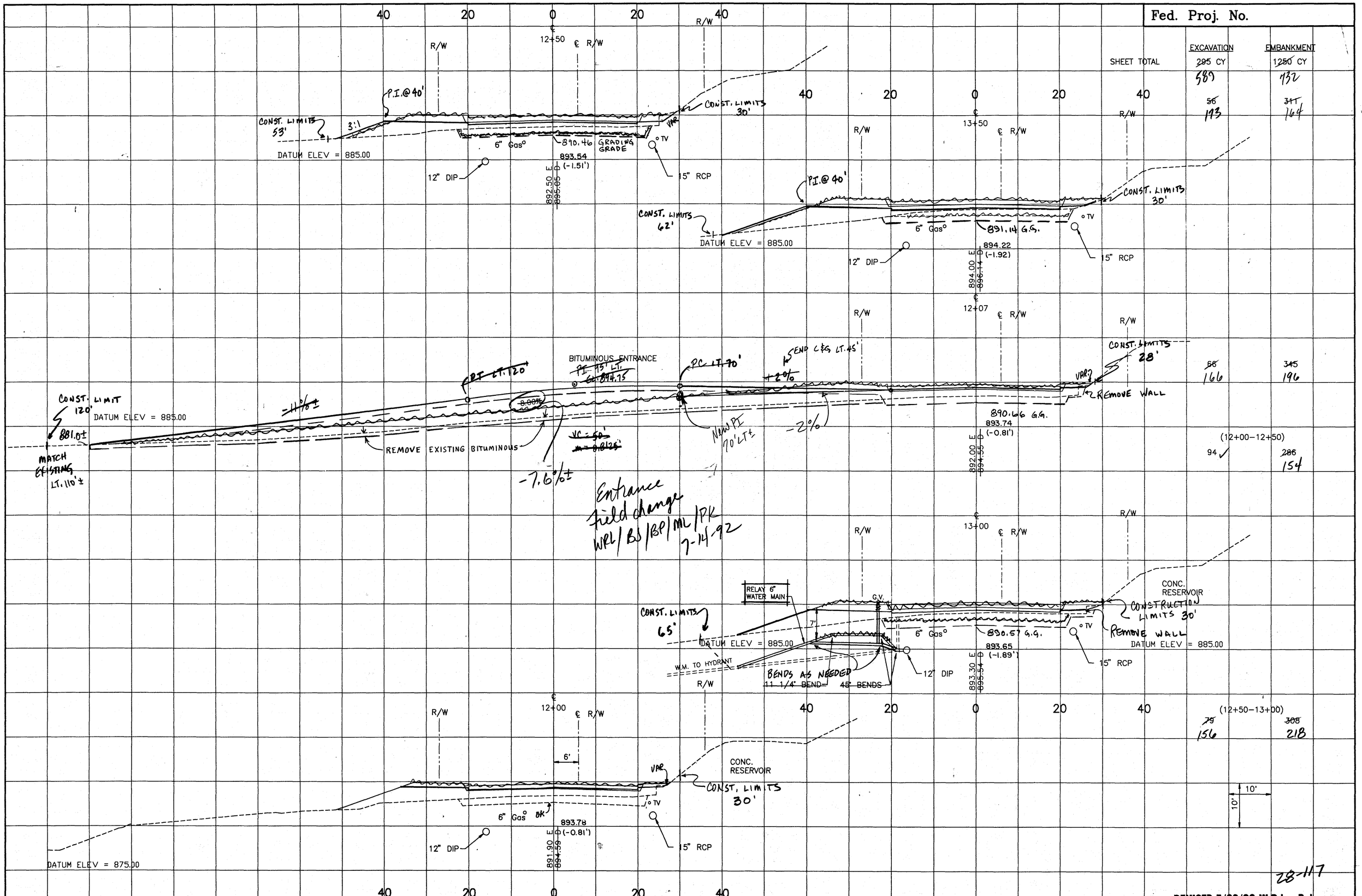


28-117

REVISED 5/22/92 W.R.L., B.J.

©BONESTROO, ROSENE, ANDERLIK & ASSOCIATES, INC. 1989

| | | |
|---|---|---|
| SURVEY CREW | HBR | REVISIONS |
| DRAWN | DFD | |
| DESIGN | TWP | |
| APPROVD | MLS | |

BONESTROO, ROSENE, ANDERLIK & ASSOC., INC.
ENGINEERS & ARCHITECTS
St. Paul, Minnesota

RAMSEY COUNTY, MINNESOTA
DATE: OCT. 19, 1989 COMM. 21802

ROSELAWN AVENUE
X-SECTIONS
Sta. 12+00 to Sta. 13+50

SHET 19/24

S.A.P. 62-626-04

21802-16

Fed. Proj. No.

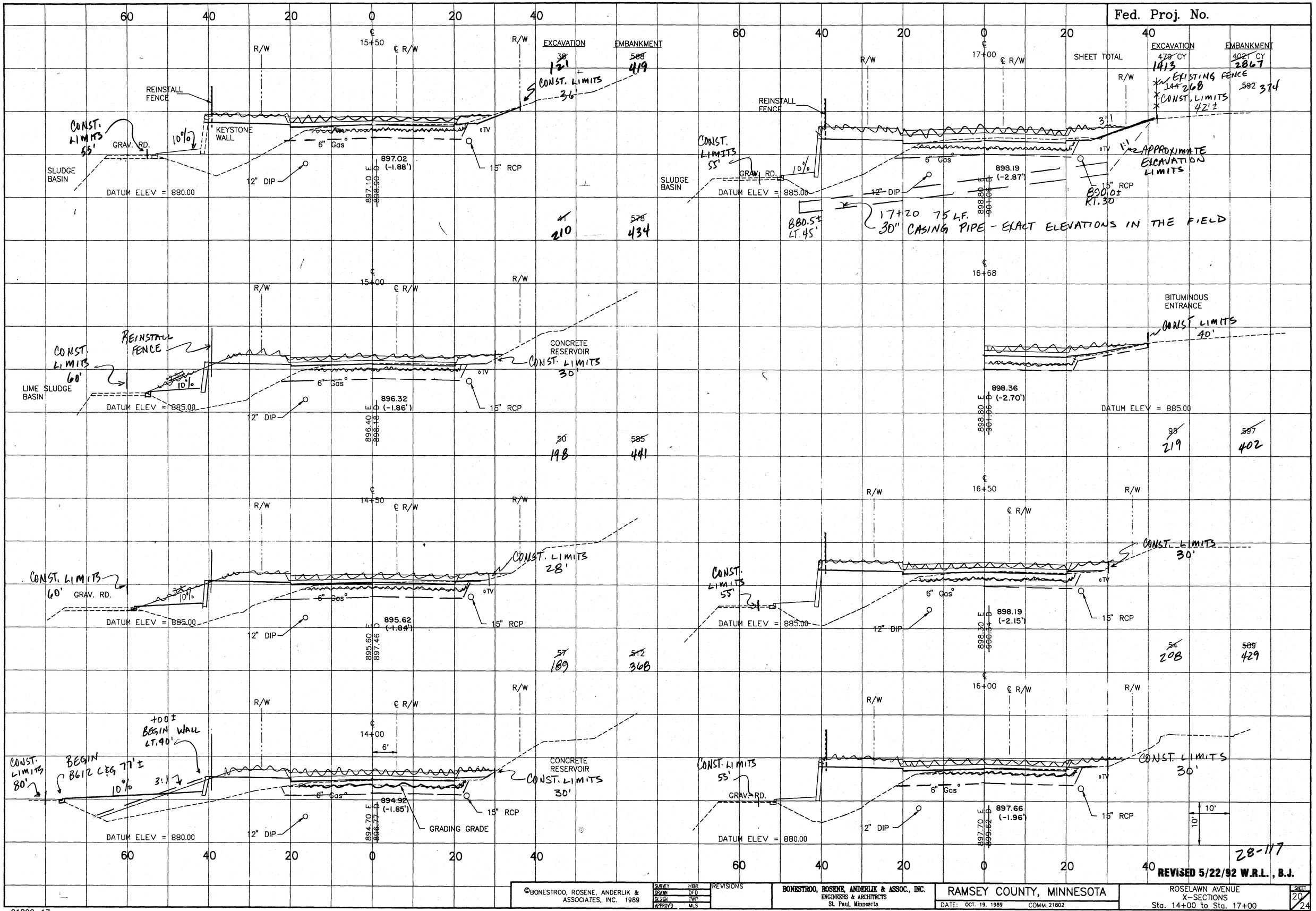


REVISED 5/22/92 W.R.L., B.J.

©BONESTROO, ROSENE, ANDERLIK & ASSOCIATES, INC. 1989

| | |
|---|---|
| SURVEY | HBR |
| DRAWN | DFD |
| DESIGN | TWP |
| APPROVD | MLS |

REVISIONS

BONESTROO, ROSENE, ANDERLIK & ASSOC., INC.
ENGINEERS & ARCHITECTS
St. Paul, Minnesota

RAMSEY COUNTY, MINNESOTA

DATE: OCT. 19, 1989 COMM. 21802

ROSELAWN AVENUE
X-SECTIONS
Sta. 14+00 to Sta. 17+00

SHEET 20/24

S.A.P. 62-626-04

21802-17

Fed. Proj. No.

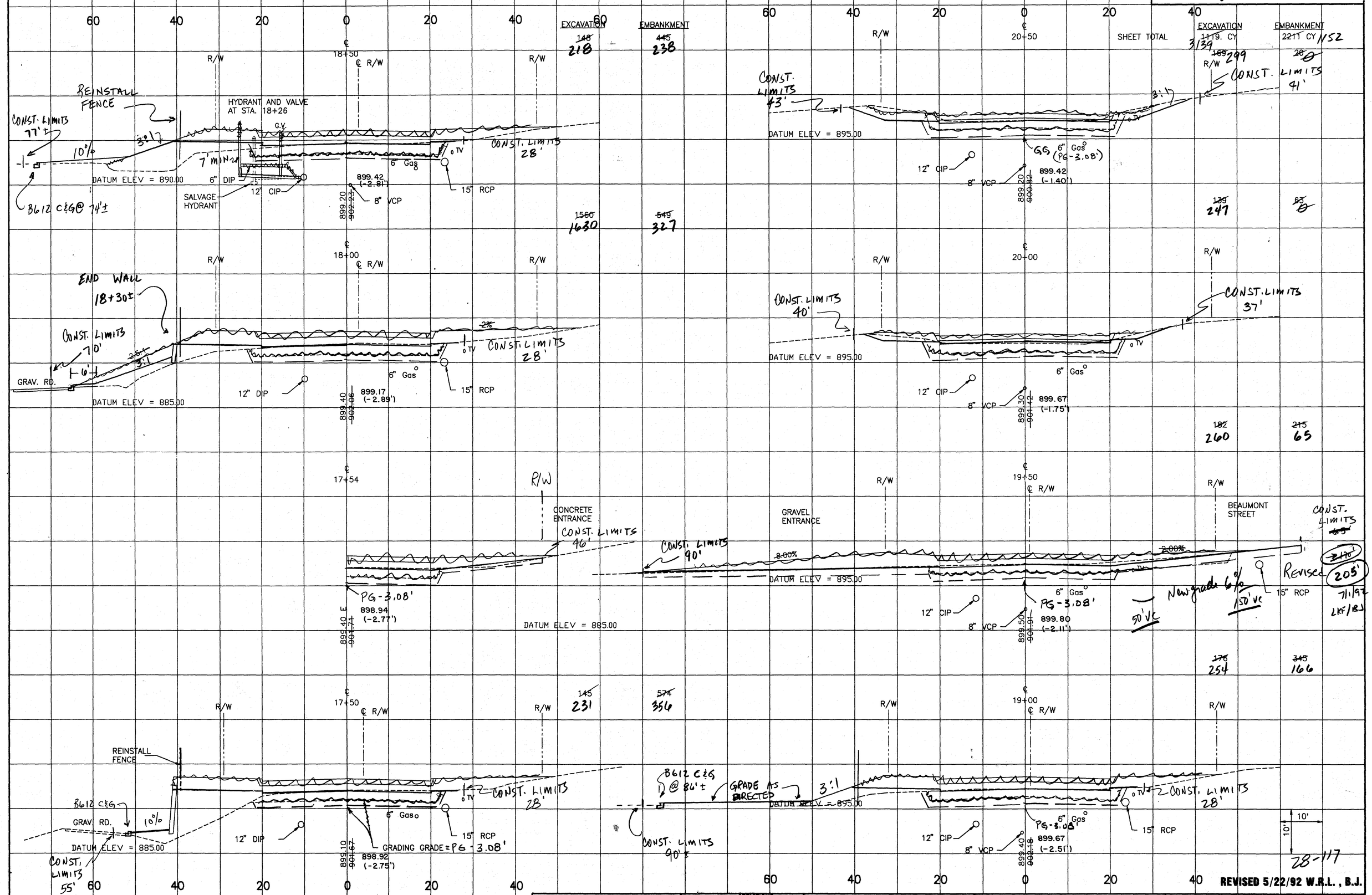


REVISED 5/22/92 W.R.L., B.J.

| | | | |
|---|---|---|---|
| ©BONESTROO, ROSENE, ANDERLIK & ASSOCIATES, INC. 1989 | SURVEY HBR<br>DRAWN DFD<br>DESIGN TWC<br>APPROVD MLS | REVISIONS | BONESTROO, ROSENE, ANDERLIK & ASSOC., INC.<br>ENGINEERS & ARCHITECTS<br>St. Paul, Minnesota |
| RAMSEY COUNTY, MINNESOTA<br>DATE: OCT. 19, 1989 COMM. 21802 | ROSELAWN AVENUE<br>X-SECTIONS<br>Sta. 17+50 to Sta. 20+50<br>S.A.P. 62-626-04 | Sheet 21/24 | |

21802-18

Fed. Proj. No.

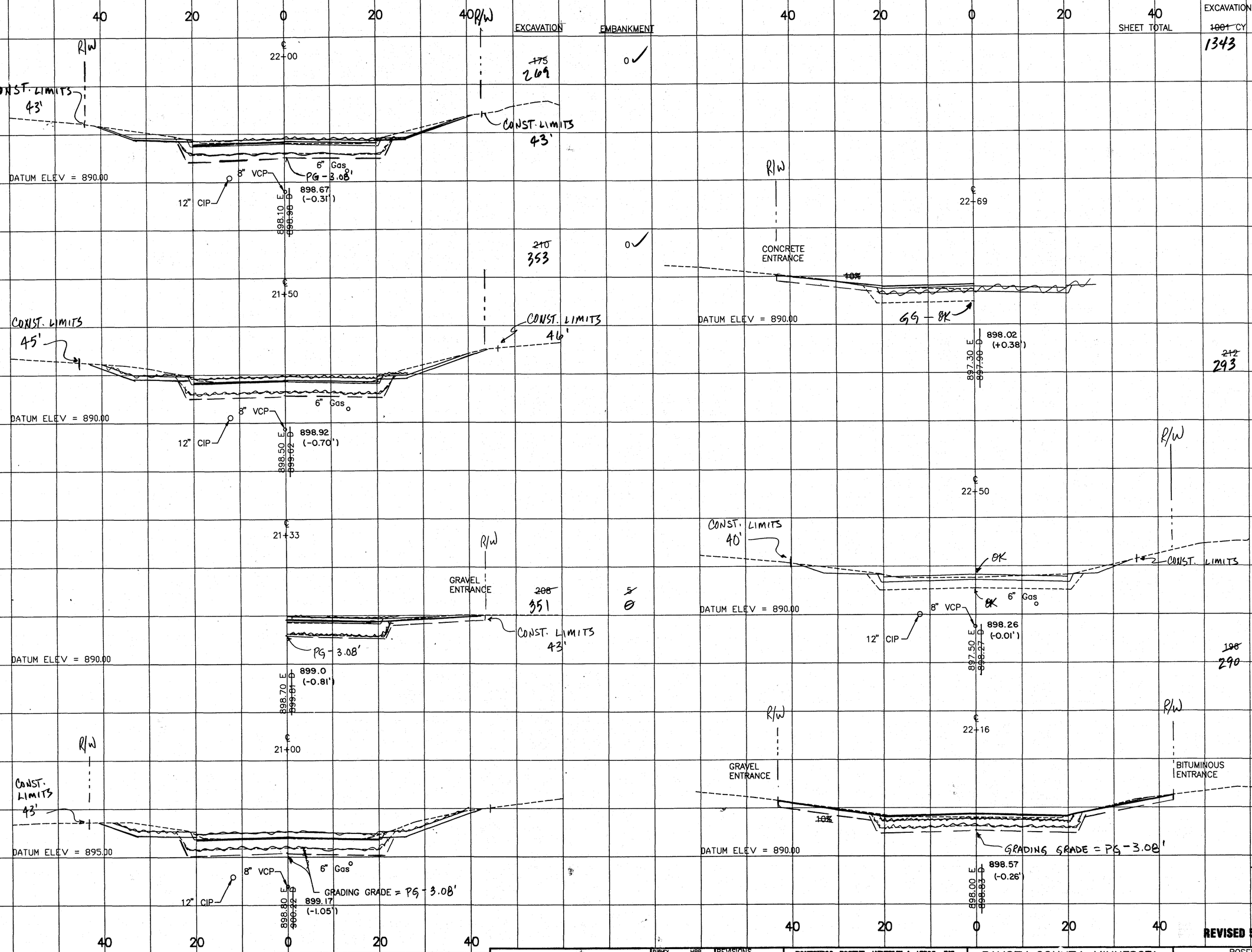


| | EXCAVATION | EMBANKMENT |
|---|---|---|
| SHEET TOTAL | ~~1001~~ CY 1343 | ~~5~~ CY ~~0~~ |

REVISED 5/22/92 W.R.L., B.J.

©BONESTROO, ROSENE, ANDERLIK & ASSOCIATES, INC. 1989

| | |
|---|---|
| SURVEY | HBR |
| DRAWN | DFO |
| DESIGN | TWP |
| APPROVD | MLS |

REVISIONS

BONESTROO, ROSENE, ANDERLIK & ASSOC., INC.
ENGINEERS & ARCHITECTS
St. Paul, Minnesota

RAMSEY COUNTY, MINNESOTA
DATE: OCT. 19, 1989 COMM. 21802

ROSELAWN AVENUE
X-SECTIONS
Sta. 21+00 to Sta. 22+69

SHEET 22/24

S.A.P. 62-626-04

21802x10

Fed. Proj. No.

| | EXCAVATION | EMBANKMENT |
|---|---|---|
| SHEET TOTAL | ~~303~~ CY 426 | 0 ✓ |
| PROJECT TOTALS | ~~6445~~ CY | ~~26943~~ CY |

REVISED EARTHWORK SUMMARY 5/22/92

ORIGINAL QUANTITIES

| | EXC. | EMBANKMENT |
|---|---|---|
| | 6445 CY | 26943 CY |
| REVISIONS 5/22 | +3714 CY | - 2597 CY |
| | 10,159 CY | 24,346 CY |

COMMON EXC.

3714 CY ÷ 2 (SHRINKAGE & UNSUITABLE MATERIAL) = 1857 CY

∴ 1857 CY USABLE AS EMBANKMENT

EMBANKMENT

2597 CY x 1.3 (COMPACTION) = 3376 CY

∴ 3376 CY (LV) LESS COMMON BORROW

COMMON BORROW

| | |
|---|---|
| QUANTITY IN PLANS | 32000 CY (LV) |
| REVISED EMBANKMENT | - 3376 CY (LV) |
| | 28,642 CY (LV) |
| REVISED EXCAVATION | - 1,857 CY (LV) |
| TOTAL COMMON BORROW → | 26,767 CY (LV) |

20 0 20

EXCAVATION ~~88~~ 129 — EMBANKMENT 0 ✓

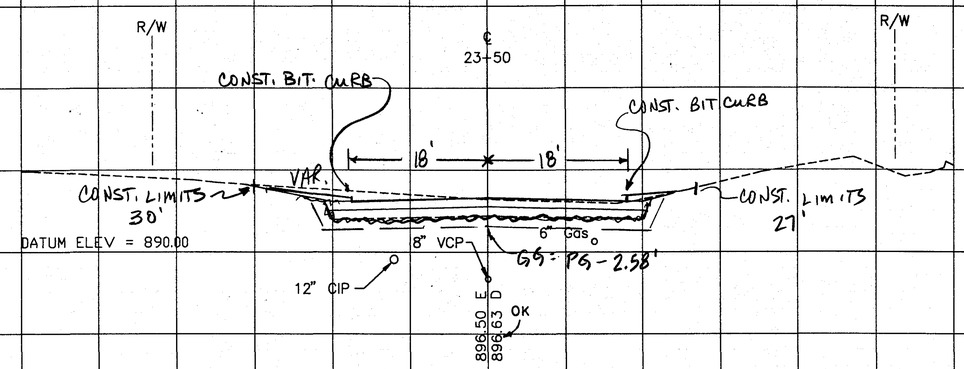


23+40 BEGIN 20:1 SUBCUT TAPER

~~170~~ 252 — 0 ✓

END BL24 C&G 23+03
BEGIN BIT. CURB & TAPER

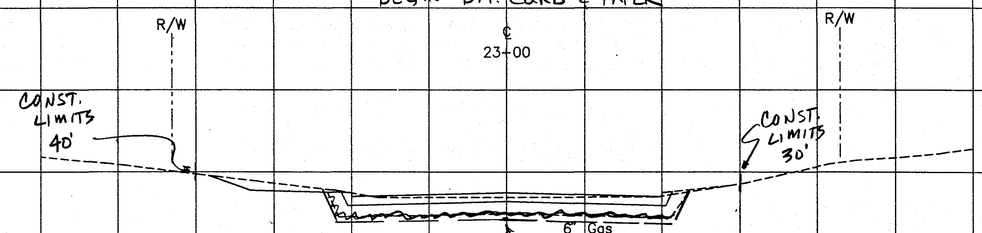


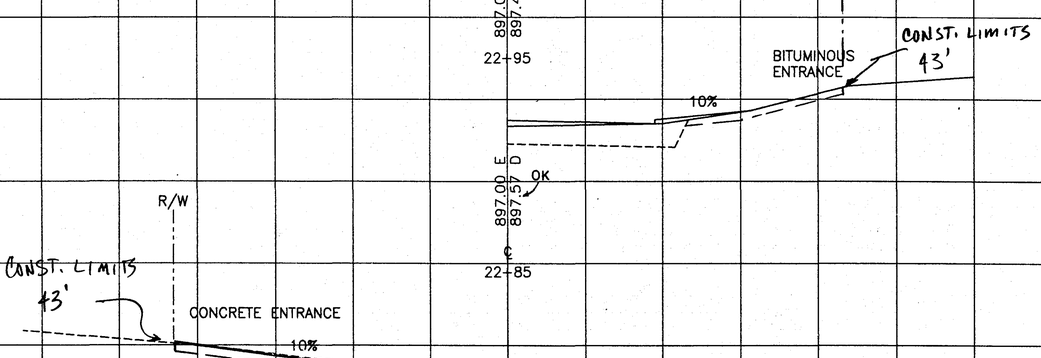


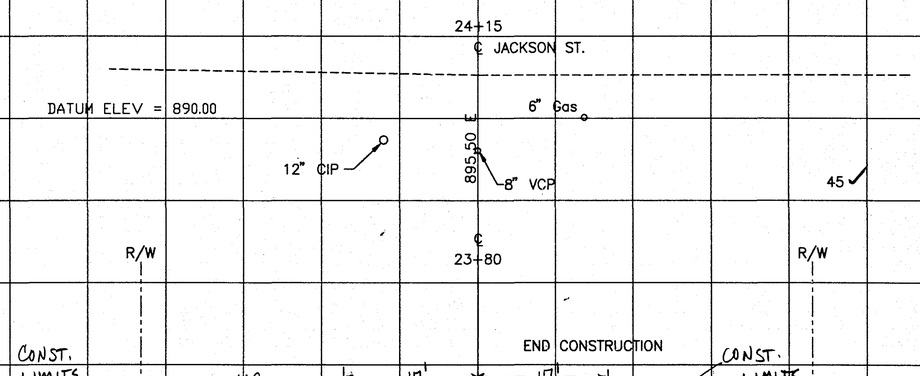


28-117

40 20 0 20 20 0 20

REVISED 5/22/92 W.R.L., B.J.

©BONESTROO, ROSENE, ANDERLIK & ASSOCIATES, INC. 1989

| | | |
|---|---|---|
| SURVEY | HBR | REVISIONS |
| DRAWN | JPC | x |
| DESIGN | TWP | |
| APPROVD | MLS | |

BONESTROO, ROSENE, ANDERLIK & ASSOC., INC.
ENGINEERS & ARCHITECTS
St. Paul, Minnesota

RAMSEY COUNTY, MINNESOTA
DATE: OCT. 19, 1989 COMM. 21802

ROSELAWN AVENUE
X-SECTIONS
Sta. 22+79 to Sta. 24+15

SHEET 23/24

S.A.P. 62-626-04

21802x11

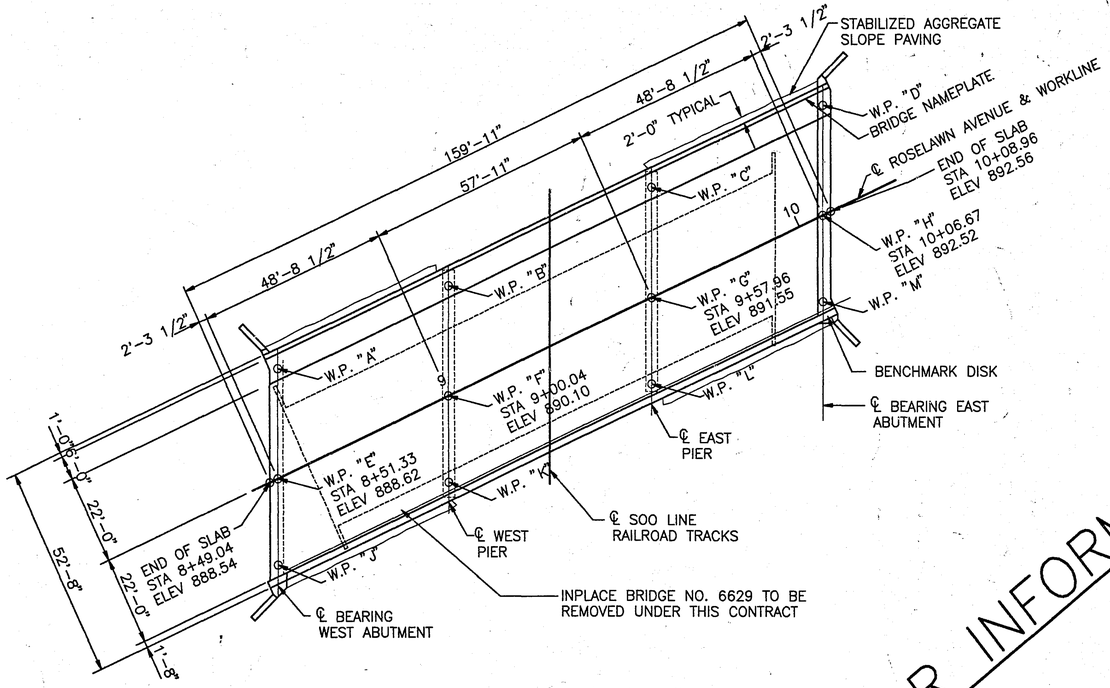


GENERAL PLAN

SCALE 0 20'

FOR INFORMATION ONLY

## CONSTRUCTION NOTES

THE 1988 EDITION OF THE MINNESOTA DEPARTMENT OF TRANSPORTATION "STANDARD SPECIFICATIONS FOR CONSTRUCTION" SHALL GOVERN.

BRIDGE SEAT REINFORCEMENT SHALL BE CAREFULLY PLACED TO AVOID INTERFERENCE WITH DRILLING HOLES FOR ANCHOR RODS. THE SUPERSTRUCTURE BEAMS SHALL BE ERECTED IN FINAL POSITION PRIOR TO DRILLING HOLES FOR AND PLACING ANCHOR RODS.

THE FIRST DIGIT OR THE FIRST TWO DIGITS OF EACH BAR MARK INDICATE THE BAR SIZE.

BAR MARKED WITH THE SUFFIX "E" SHALL BE EPOXY COATED IN ACCORDANCE WITH 3301.

RESTORE SIDE DITCHES AFTER PLACEMENT OF SLOPE PAVING TO PROVIDE DRAINAGE AS DIRECTED BY THE ENGINEER. RESTORATION COSTS SHALL BE INCLUDED IN PRICE BID FOR STRUCTURE EXCAVATION.

CONSTRUCTION OF EACH ABUTMENT SHALL NOT BE STARTED UNTIL THE APPROACH FILL AT THE ABUTMENT HAS BEEN CONSTRUCTED TO THE FULL HEIGHT AND CROSS SECTION.

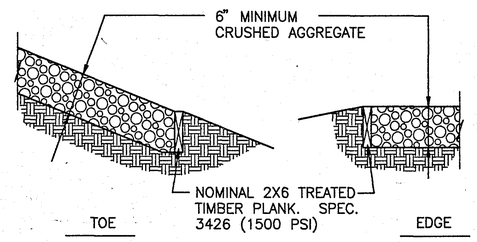


SLOPE PAVING DETAILS

NO SCALE

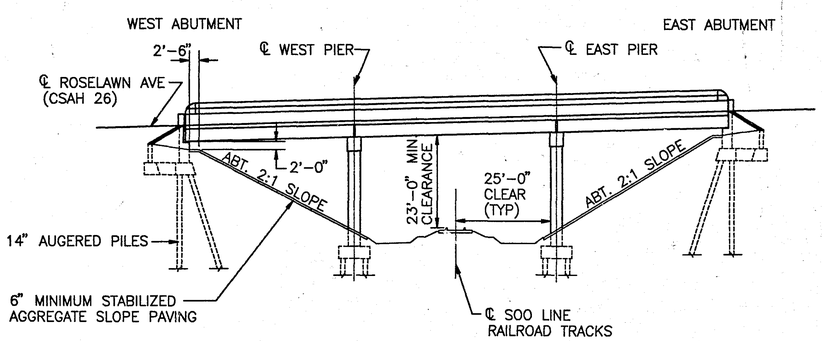


GENERAL ELEVATION

SCALE 0 20'

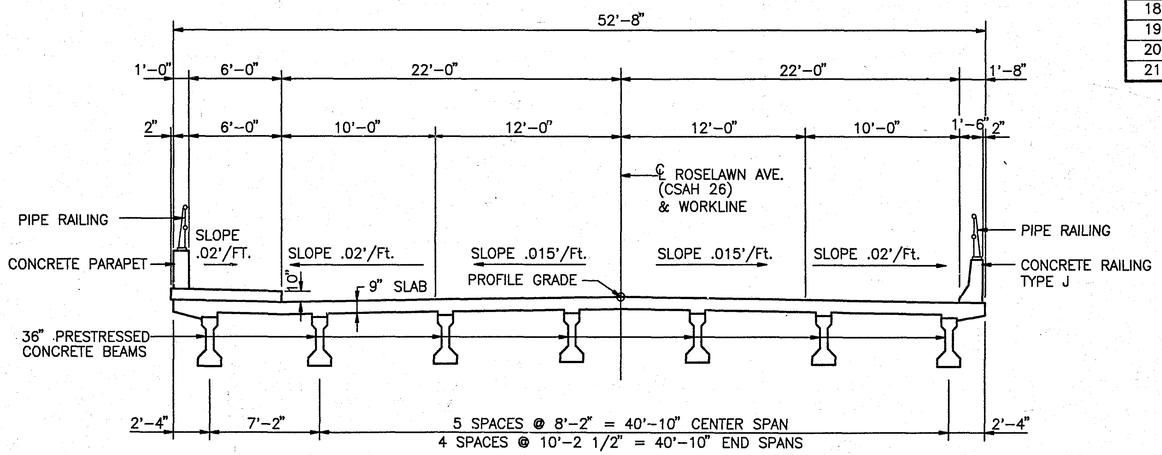


SECTION OF FINISHED BRIDGE FLOOR

SCALE 0 5'

State. Proj. No. 62-626-03

## DESIGN DATA

1983 (AND CURRENT INTERIM) AASHTO DESIGN SPECIFICATIONS.

DESIGN LOADING HS25 LIVE LOAD.

LOAD FACTOR DESIGN METHOD.

DEAD LOAD INCLUDES 17 P.S.F. ALLOWANCE FOR FUTURE WEARING COURSE MODIFICATIONS.

MAXIMUM ALLOWABLE DESIGN STRESSES:

REINFORCED CONCRETE
f'c = 4,000 P.S.I. n = 8
fy = 60,000 P.S.I. REINFORCEMENT.

PRESTRESSED CONCRETE
f'c = 6,000 P.S.I. n = 6
f's = 270,000 P.S.I. STRAND LOW LAX

DECK AREA = _____ SQ. FT.

5300 PROJECTED ADT FOR YEAR 2007

OPERATING RATING HS

## LIST OF SHEETS


| | |
|---|---|
| 1 | GENERAL PLAN & ELEVATION |
| 2 | BRIDGE LAYOUT |
| 3 | ABUTMENT PLAN & ELEVATION |
| 4 | ABUTMENT REINFORCEMENT |
| 5 | ABUTMENT DETAILS |
| 6 | PIER PLAN & ELEVATIONS |
| 7 | PIER REINFORCEMENT & DETAILS |
| 8 | FRAMING PLAN |
| 9 | 36" PRESTRESSED CONC. BEAM, TYPE 36-50 |
| 10 | 36" PRESTRESSED CONC. BEAM, TYPE 36-53 |
| 11 | BRIDGE DECK PLAN |
| 12 | CONCRETE PARAPET & PIPE RAILING |
| 13 | PIPE & CONCRETE RAILING - TYPE J |
| 14 | WATERPROOF EXPANSION DEVICE |
| 15 | WATERPROOF EXPANSION DEVICE |
| | SNOW PLOW PROTECTION |
| 16 | BRIDGE NAMEPLATE/SOLE PLATE |
| 17 | CURVED PLATE BEARING ASSEMBLIES |
| 18 | INTERMEDIATE DIAPHRAGM/END DIAPHRAGM |
| 19 | CONTRACTION JOINT/ FENCE POST ANCHOR |
| 20 | BRIDGE SURVEY |
| 21 | BRIDGE SURVEY |



BONESTROO, ROSENE, ANDERLIK & ASSOC., INC.
Engineers & Architects
St. Paul, Minnesota


I HEREBY CERTIFY THAT THIS PLAN WAS PREPARED BY ME OR UNDER MY DIRECT SUPERVISION AND THAT I AM A DULY REGISTERED PROFESSIONAL ENGINEER UNDER THE LAWS OF THE STATE OF MINNESOTA.

SIGNED _____

DATE: _____ REG. NO. _____

B.M. ELEV. . (M.S.L. 1929 ADJ.)
SEE BRIDGE SURVEY SHEET No.

ROSELAWN AVENUE (CSAH 26)
MINNESOTA
DEPARTMENT OF TRANSPORTATION

# BRIDGE No. 62559

ROSELAWN AVE (CSAH 26) OVER SOO LINE RAILROAD. .2 MILES E. OF T.H. 49 (RICE ST.) IN MAPLEWOOD. PRESTESSED CONCRETE BEAM SPANS, 44'-0" ROADWAY, 24.7' SKEW.

## GENERAL PLAN AND ELEVATION

SEC. 18 T 29 N R 22 W
MAPLEWOOD CITY RAMSEY COUNTY

APPROVED: _____ 28-117
BRIDGE ENGINEER DEPUTY DIV. DIRECTOR

DES: MTR DR: LHK
CHK: . CHK: .

## SCHEDULE OF QUANTITIES FOR ENTIRE BRIDGE

| ITEM NO. | 2401.501 | 2401.501 | 2401.512 | 2401.513 | 2401.513 | 2401.515 | 2401.541 | 2401.541 | 2402.585 | 2402.591 | 2402.595 | 2405.502 | 2405.502 | 2405.511 | 2442.501 | 2514.503 | 0401.601 | 0452.604 |
|---|---|---|---|---|---|---|---|---|---|---|---|---|---|---|---|---|---|---|
| ITEM | STRUCTURE CONCRETE (1A43) | STRUCTURE CONCRETE (3Y43) | BRIDGE SLAB CONCRETE (3X33) | TYPE F RAILING CONCRETE (3X46) | TYPE J RAILING CONCRETE (3X46) | SIDEWALK CONCRETE (3X46) | REINFORCE-MENT BARS | REINFORCE-MENT BARS (EPOXY COATED) | PIPE RAILING | EXPANSION JOINT DEVICES, TYPE 3 | BEARING ASSEMBLY | PRESTRESSED CONCRETE BEAMS, TYPE 36-50 | PRESTRESSED CONCRETE BEAMS TYPE 36-58 | DIAPHRAGMS FOR TYPE 28-43 PRESTRESSED BEAMS | REMOVE OLD BRIDGE | AGGREGATE SLOPE PAVING | STRUCTURE EXCAVATION | 14" AUGERED PILE, FURN'D & DRIVEN |
| UNIT | CU. YD. | CU. YD. | SQ. FT. | LIN. FT. | LIN. FT. | SQ. FT. | POUND | POUND | LIN. FT. | LIN. FT. | EACH | LIN. FT. | LIN. FT. | LIN. FT. | LUMP SUM | SQ. YD. | LUMP SUM | LIN. FT. |
| QUANTITY | . (P) | . (P) | . (P) | . (P) | . (P) | . (P) | . (P) | . (P) | . (P) | . (P) | . (P) | . (P) | . | . (P) | . (P) | . (P) | . | . |

Area No. . Job No. . State Project No. 62-626-03 Sheet No. 24 of 24 Sheets

21802-23.DWG